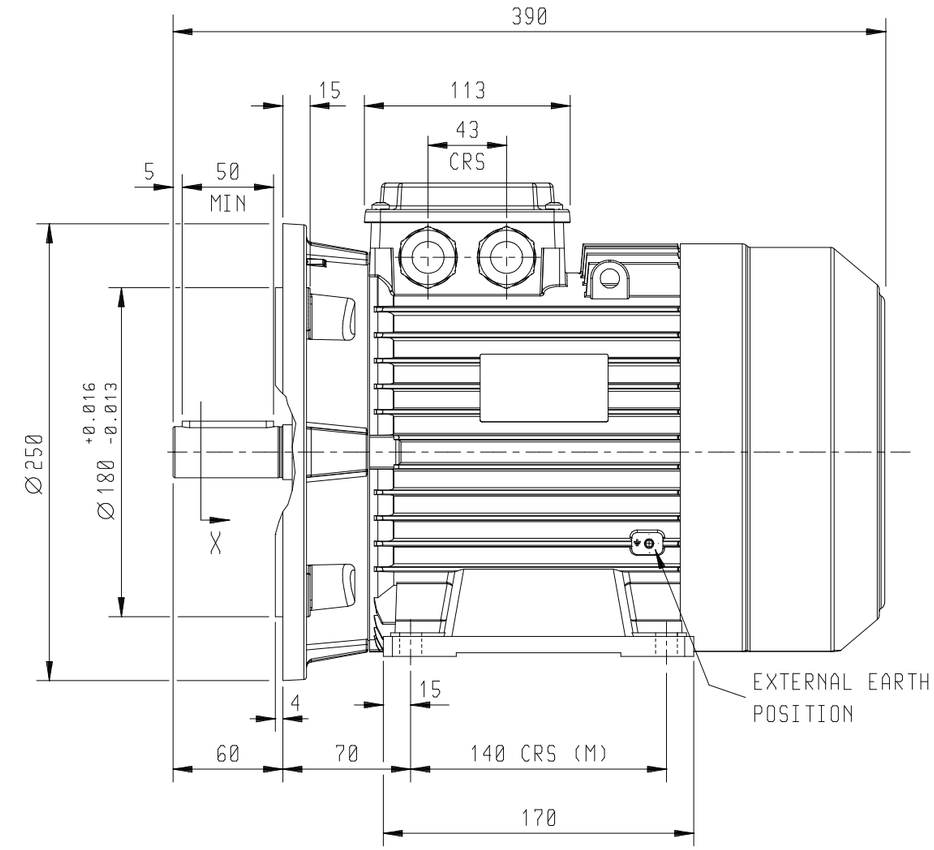

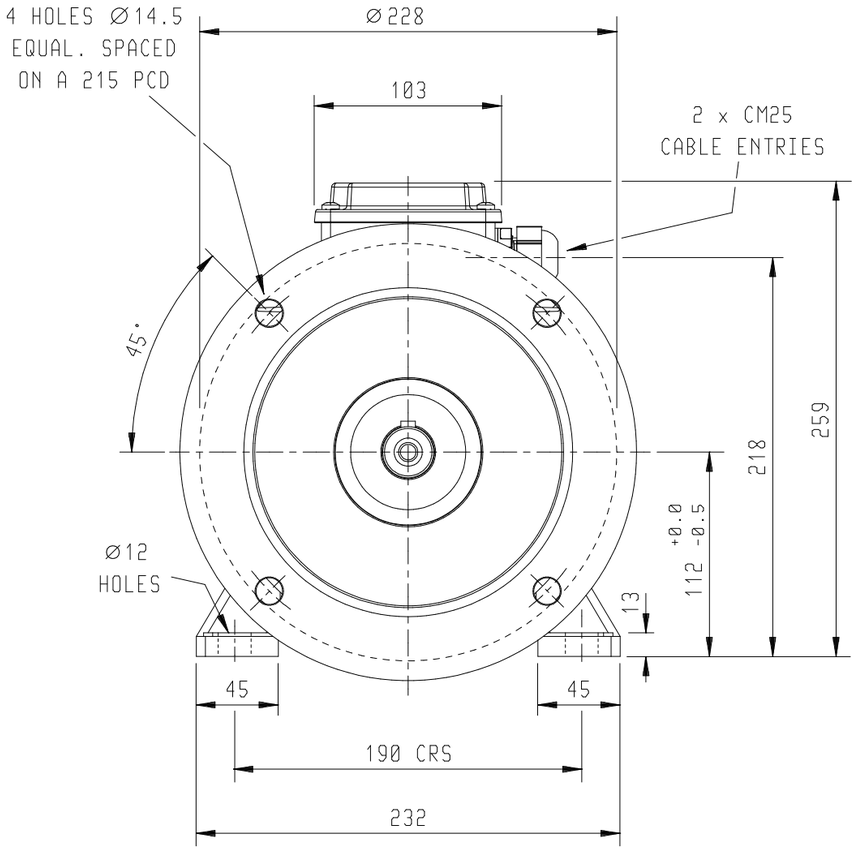

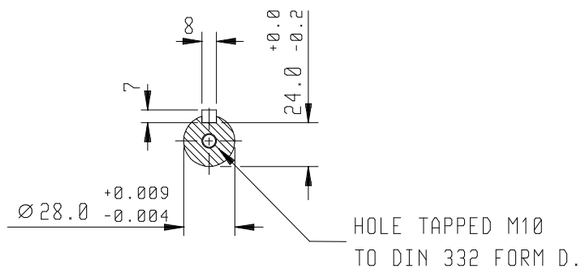

SECTION ON 'X'

ALL DIMENSIONS ARE IN MILLIMETRES.

FIRST ANGLE PROJECTION

BROOK CROMPTON
Keeping Industry Turning

Huddersfield, HD1 3LJ. ENGLAND

SHEET SIZE	TITLE		NAME	DATE	DRG. No. J12GD002/0
A3	OUTLINE DIMENSION DRAWING S30 ALUMINIUM TOTALLY ENCLOSED FAN COOLED 112 FRAME FOOT & D FLANGE MOUNTED MOTOR	DRAWN	DH	1.11.21	DRG. REF.
		CHECKED	GES	1.11.21	
		SCALE	1 : 3.5		REVISION: DATE