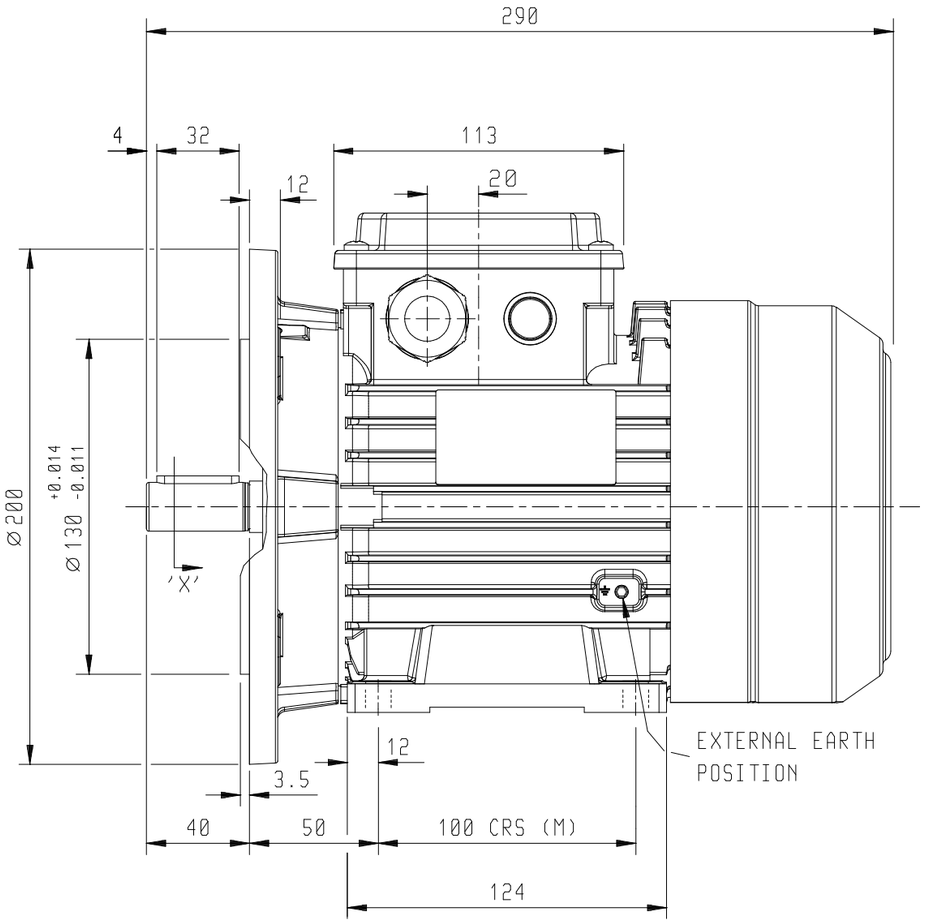

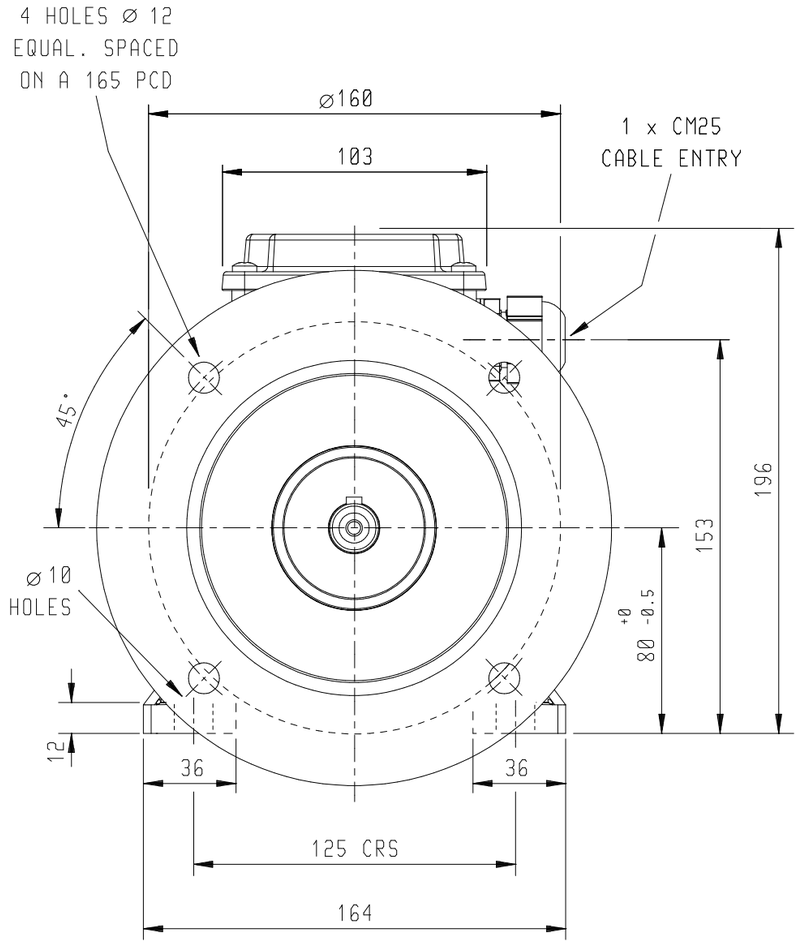

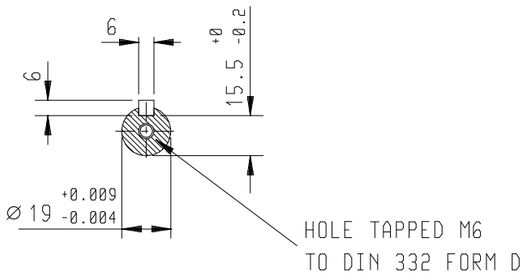

SECTION ON 'X'

ALL DIMENSIONS IN MILLIMETRES.

FIRST ANGLE PROJECTION

BROOK CROMPTON
Keeping Industry Turning

Huddersfield, HD1 3LJ. ENGLAND

SHEET SIZE	TITLE				
A3	OUTLINE DIMENSION DRAWING ALUMINIUM S30 IE3 TOTALLY ENCLOSED FAN COOLED 80M FRAME FOOT & D FLANGE MOUNTED MOTOR		NAME	DATE	DRG. No. J80GD002/0
		DRAWN	DH	13.10.21	DRG. REF.
		CHECKED	GES	13.10.21	
		SCALE	1 : 2.5		REVISION: DATE