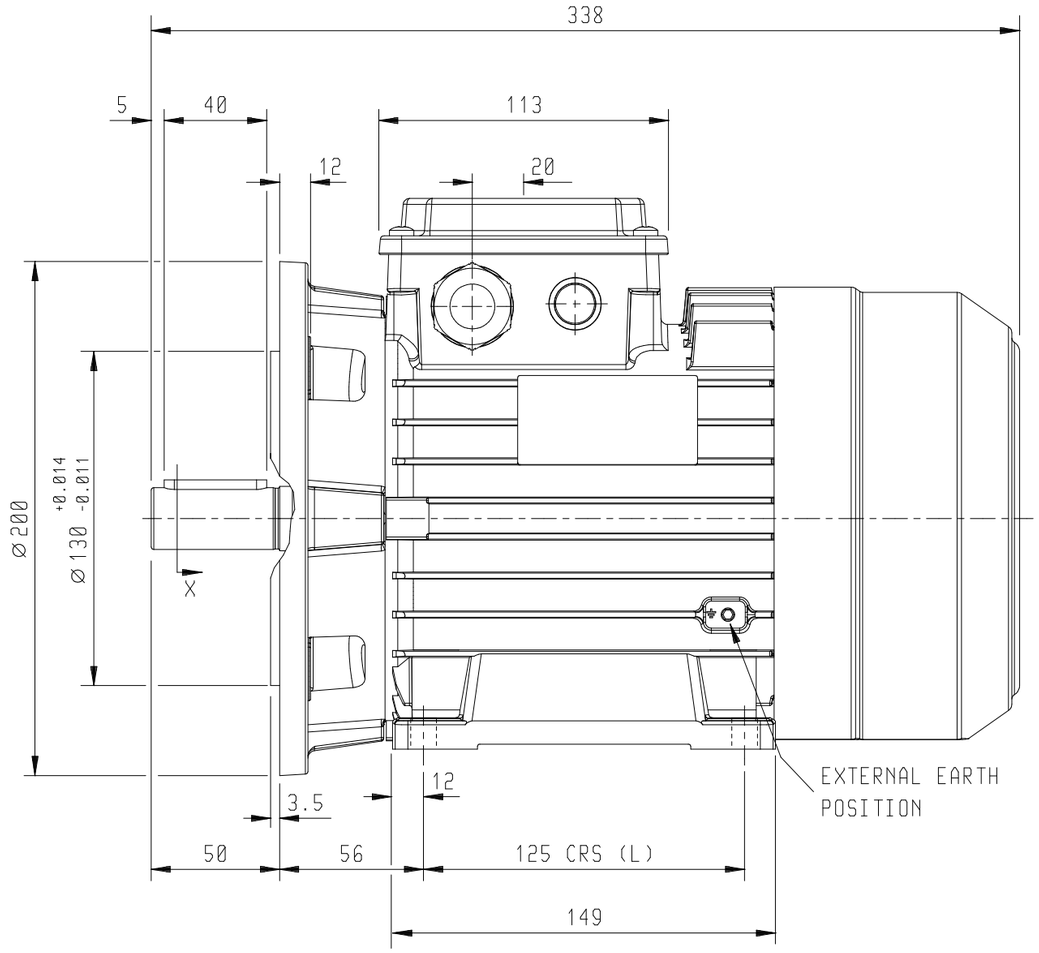

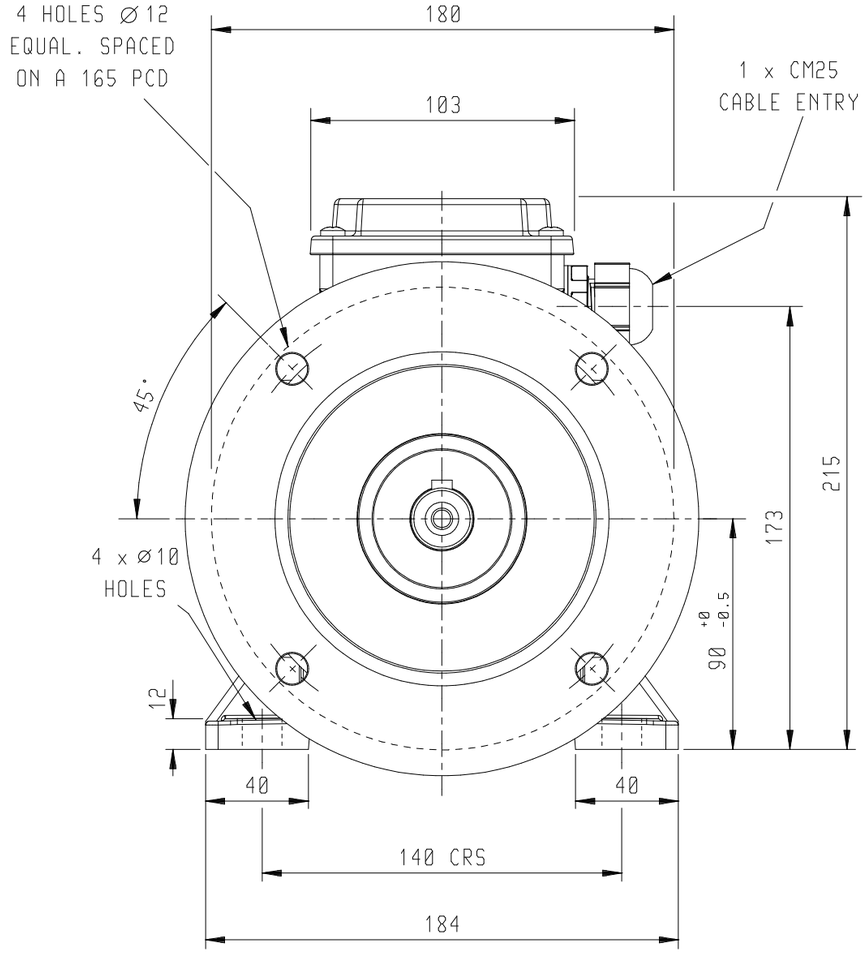

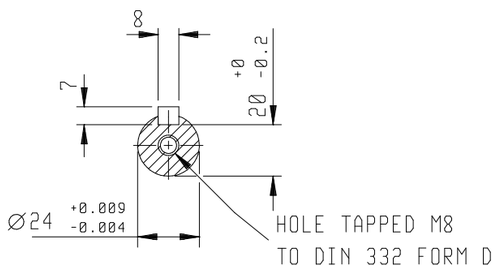

SECTION ON 'X'

ALL DIMENSIONS IN MILLIMETRES.

FIRST ANGLE PROJECTION

BROOK CROMPTON
Keeping Industry Turning

Huddersfield, HD1 3LJ. ENGLAND

SHEET SIZE	TITLE		NAME	DATE	DRG. No. J93GD002/0
A3	OUTLINE DIMENSION DRAWING ALUMINIUM S30 IE3 TOTALLY ENCLOSED FAN COOLED 90L FRAME FOOT & D FLANGE MOUNTED MOTOR	DRAWN	DH	27.10.21	DRG. REF.
		CHECKED	GES	27.10.21	
		SCALE	1 : 2.5		REVISION: