TECHNICAL DATA

Three Phase Electric Motors - Cast Iron Frame
UM3C 160L-4 IE3
15 kW / 20 Cv
1470 RPM

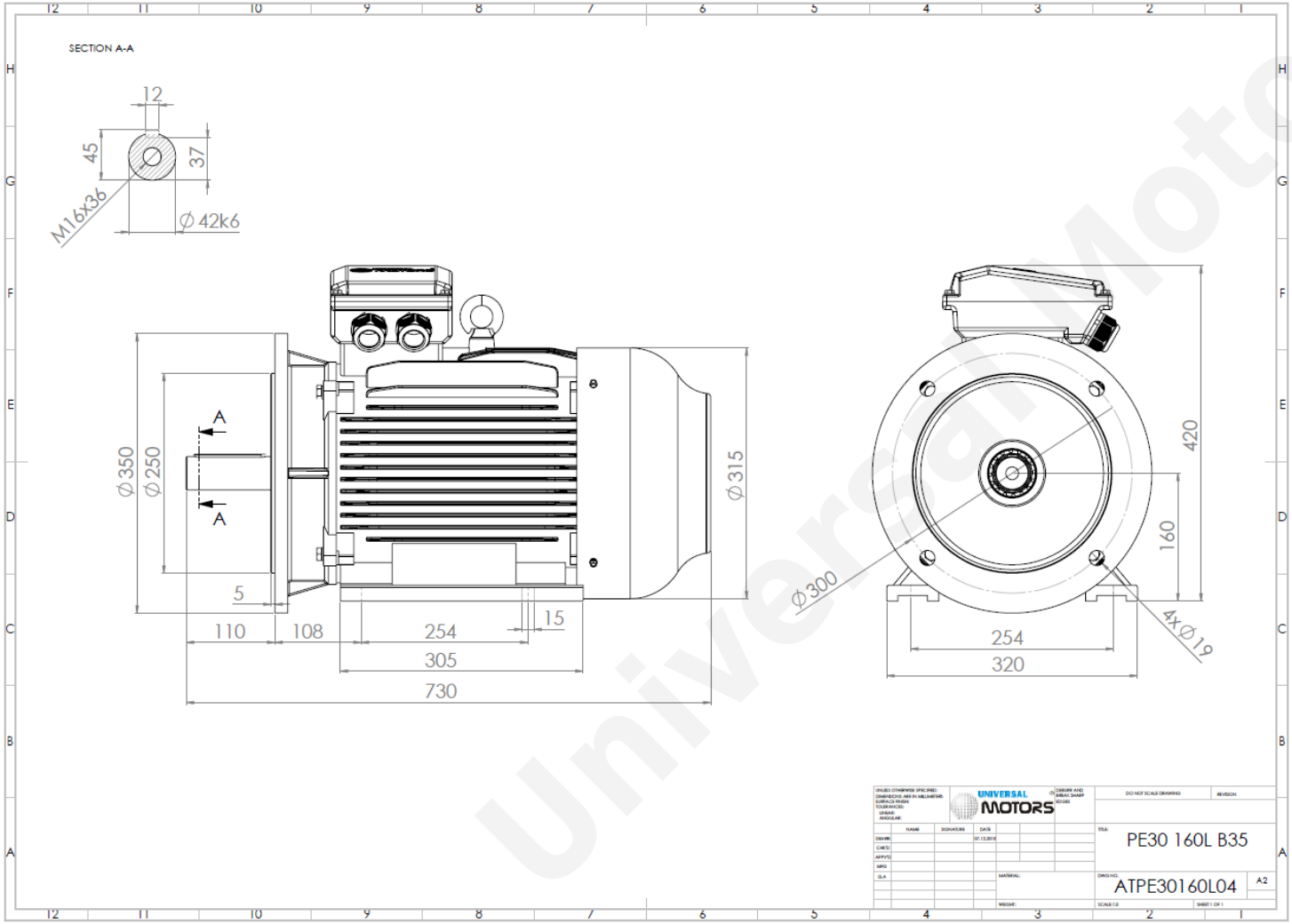

Motor type:	**UM3C 160L-4 IE3**
Output:	**15 kW / 20 Cv**
Speed (min^{-1}):	**1470 RPM**
Voltage:	**400 V**
Frequency:	**50 Hz**
Current:	**27.3 A**
Power factor (Cos Ø):	**0.86**
Poles:	**4**
Insulation class:	**F**
Temperature rise Class:	**B**
Efficiency 50%:	**91.5 %**
Efficiency 75%:	**92.5 %**
Efficiency 100%:	**92.2 %**
Torque:	**97 N.m**
Tstarting/Tnominal:	**2.2**
Istarting/Inominal:	**7.8**
Tmaximum/Tnominal:	**2.3**
Noise:	**73 Db(A)**
Weight:	**163 Kg**
Bearing DE:	**6309 C3**
Bearing NDE:	**6309 C3**

Regime - S1 **Altitude - 1000m** **Environment Temperature - 40ºC**

* References applied only in the UK

CONTACTS:
Universal Motors UK, Ltd
Unit E2, Meltham Mills Industrial Estate, Meltham Mills Road, Meltham, Holmfirth
West Yorkshire HD9 4AR, U.K
Tel: +44(0) 1484 660 222
Fax: +44(0) 1484 660 333
Mail: enquiries@universalmotors-group.co.uk

Universal Motors