TECHNICAL DATA

Three Phase Electric Motors - Aluminum Frame
UMHA 71K-4
0.25 kW / 0.33 Cv
1400 RPM

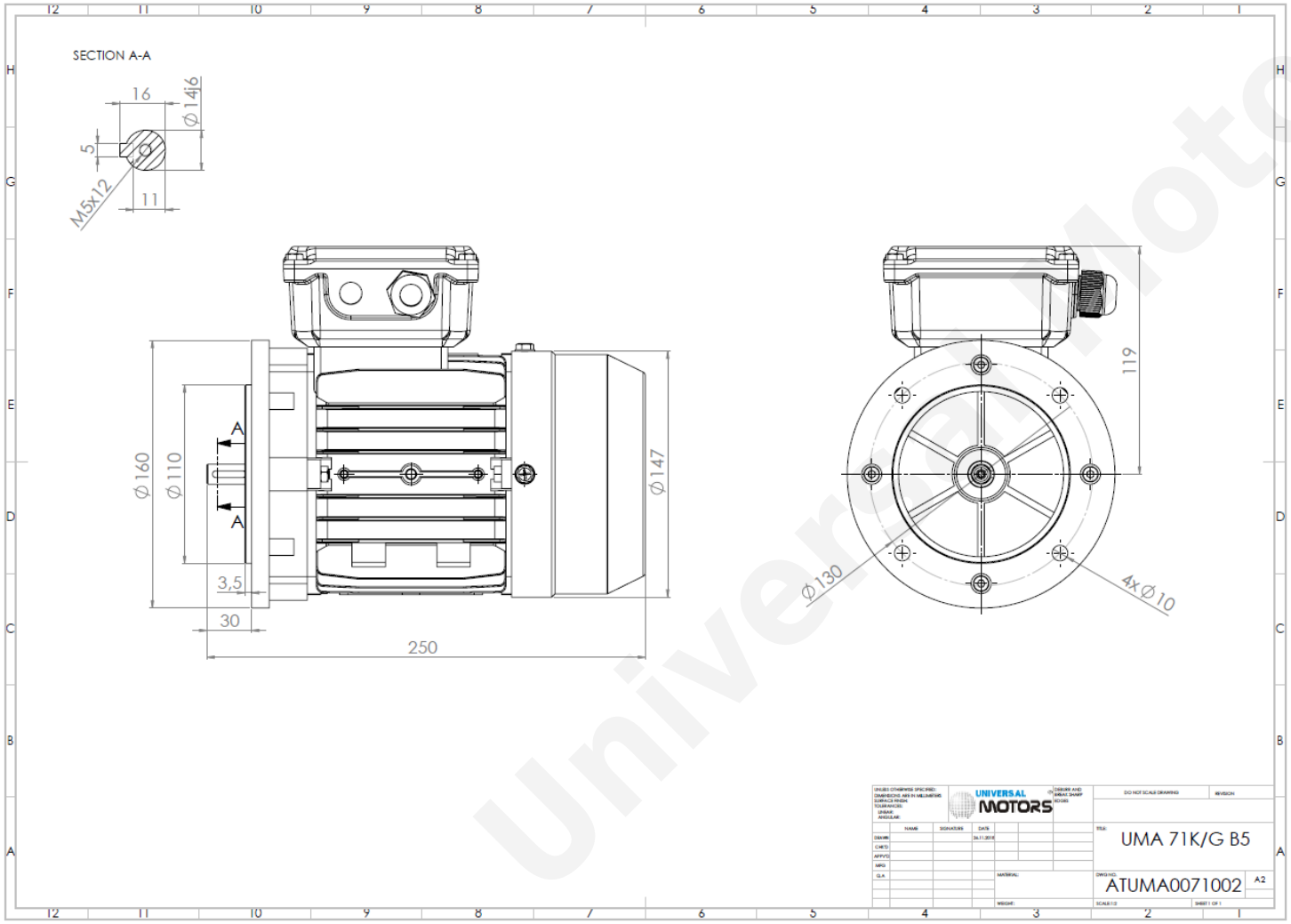

Motor type:	**UMHA 71K-4**
Output:	**0.25 kW / 0.33 Cv**
Speed (min^{-1}):	**1400 RPM**
Voltage:	**400 V**
Frequency:	**50 Hz**
Current:	**0.8 A**
Power factor (Cos Ø):	**0.70**
Poles:	**4**
Insulation class:	**F**
Temperature rise Class:	**B**
Efficiency 50%:	**60.8 %**
Efficiency 75%:	**67.0 %**
Efficiency 100%:	**68.5 %**
Torque:	**1.71 N.m**
Tstarting/Tnominal:	**2.4**
Istarting/Inominal:	**4.5**
Tmaximum/Tnominal:	**2.4**
Noise:	**64 Db(A)**
Weight:	**5.4 Kg**
Bearing DE:	**6202 2Z C3**
Bearing NDE:	**6202 2Z C3**

Regime - S1 **Altitude - 1000m** **Environment Temperature - 40ºC**

* References applied only in the UK

CONTACTS:
Universal Motors UK, Ltd
Unit E2, Meltham Mills Industrial Estate, Meltham Mills Road, Meltham, Holmfirth
West Yorkshire HD9 4AR, U.K
Tel: +44(0) 1484 660 222
Fax: +44(0) 1484 660 333
Mail: enquiries@universalmotors-group.co.uk

Universal Motors