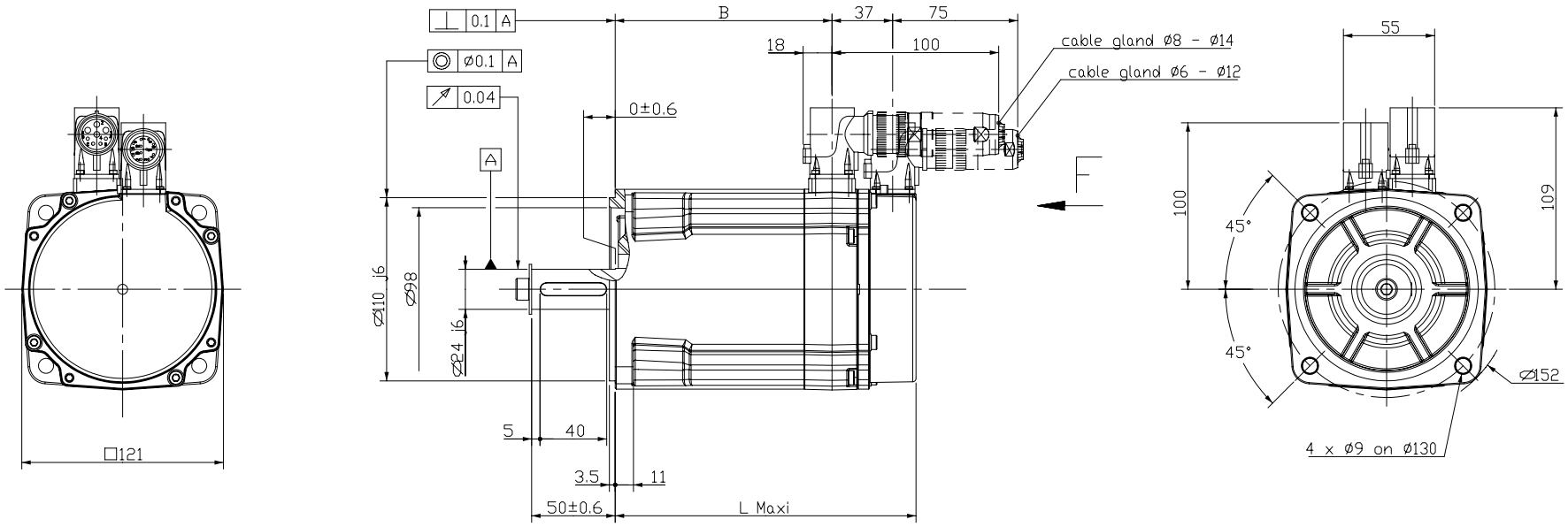

POWER CONNECTOR

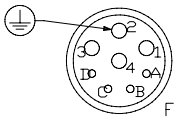

1 : Phase U
2 : Ground
3 : Phase W
4 : Phase V
A : No connection
B : No connection
C, D : Temperature sensor (option)

FEEDBACK CONNECTOR

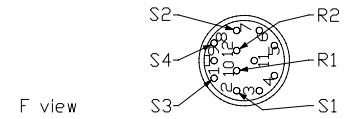

RESOLVER

Feed frequency..... : 8 kHz
Supply voltage..... : 7 V RMS
Input current..... : 70 mA Maxi
Max. electrical error..... : 20' Maxi
Transformation ratio..... : 0.5 typical
Phase shit..... : 20° Maxi
Polarity..... : 1 pair of poles

RELUCTANCE SENSOR

Feed frequency..... : 8 kHz
Input voltage..... : 7 V RMS
Input current..... : 71 mA Maxi
Max. electrical error..... : 8' Maxi
Transformation ratio..... : 0.33 typical
Phase shift..... : 15° Maxi
Polarity..... : 5 pairs of poles

ORIENTATION OF CONNECTORS

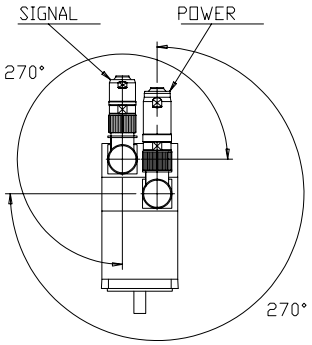

SHAFT END

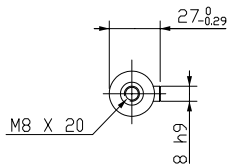

DIMENSIONS

	NX620	NX630
L Maxi	181	210
B	130	159

Drawing valid for : R7001

Weight :

This document is the property of PARVEX.Transmission as well as reproduction or copy is not permitted without written authorisation.

Drawn	24/11/00	RP	Visa
Modifications c	AM 21359 02/04/03 NV		
Modifications b	AM 21172 01/10/02 SP		
Modifications a	AM 20589 05/01/01 RG		

Scale 3:8

PARVEX
8 Avenue du lac. BP249
21007-DIJON cedex-FRANCE
www.parvex.com

NX600

OUTLINE DRAWING

Format A3

F	E	S	G	I
×	×			

344189E7001 C