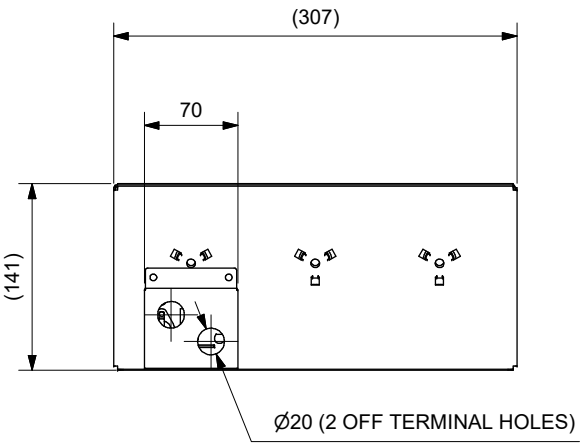

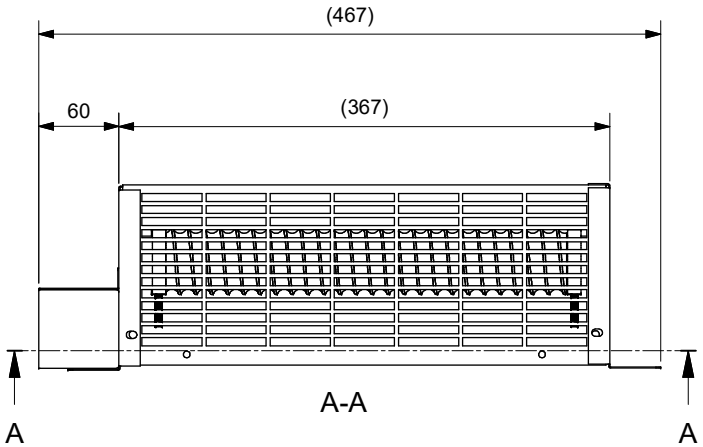

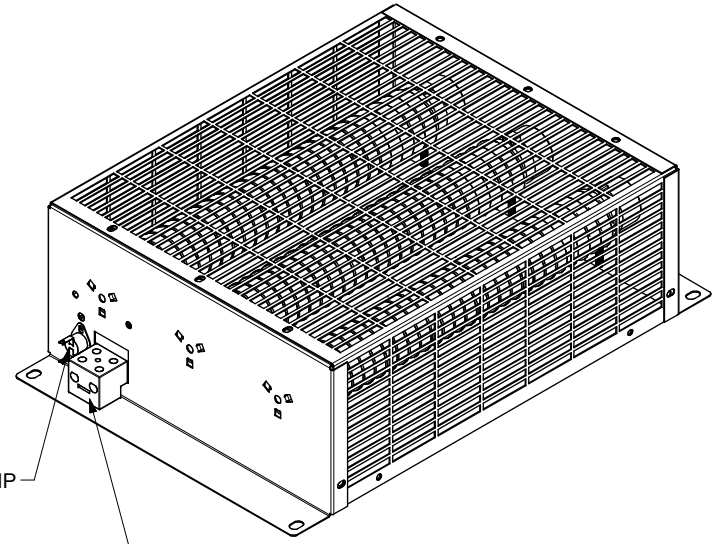

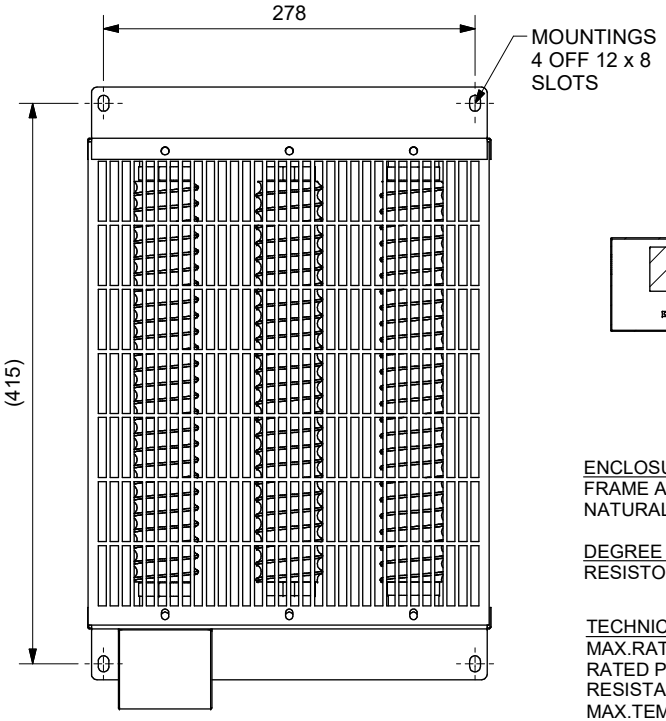

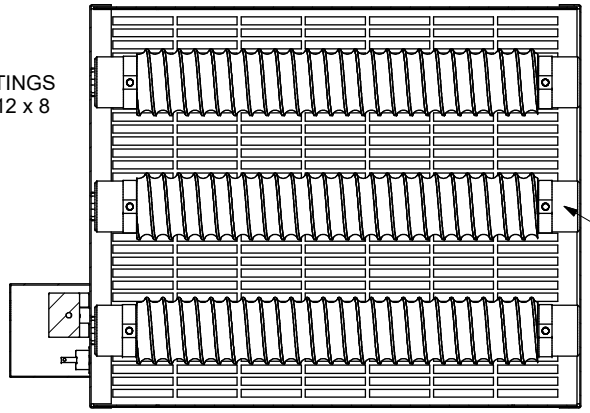

TERMINAL COVER OPTIONAL

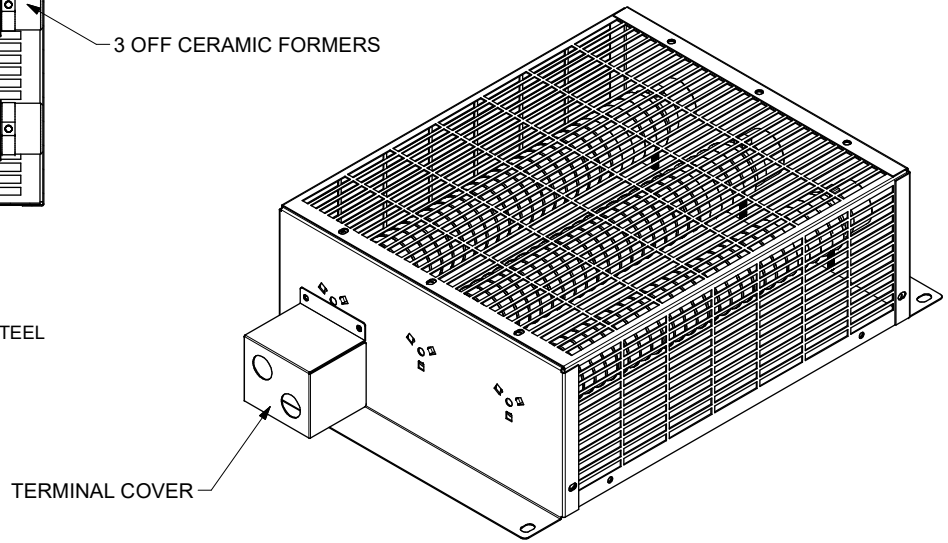

ENCLOSURE
FRAME AND COVERS 0.8 mm THICK PREGALVANISED MILD STEEL
NATURAL FINISH

DEGREE OF PROTECTION
RESISTOR ENCLOSURE INGRESS (IEC 529) IP20

TECHNICAL DATA

MAX.RATED VOLTAGE	1000 V ac or dc
RATED POWER	4.5 kW CONTINUOUS
RESISTANCE	2 - 220 Ω AT 25℃
MAX.TEMPERATURE RISE	600℃
ELEMENT TYPE	HP1500
ELEMENT MATERIAL	Fe-Cr-Al
UNIT WEIGHT	6.5 kg

ALL INSULATOR MATERIAL IS CERAMIC

ZONE	ISSUE	ECN	DESCRIPTION	DATE	DRAWN	APPROVE
	E			26/03/2004	JS	
	D	4382	NOTES ADDED	16.04.2010	JS	
	C	4340	FORMAT UPDATED	22.03.2010	JS	
	B		MODEL UPDATED	20.02.06	HB	

MATERIAL: SEE SPEC
WEIGHT: 6.5 kg
FINISH: SEE SPEC
1st CONTRACT:
TOLERANCE:- +/- 0.5 mm (UOS)
DIMENSIONS IN mm (UOS)
A3

CRESSALL
Evington Valley Road,
Leicester.LE5 5LZ
UK.
TEL:(+44)(0)1162733633
FAX:(+44)(0)1162737911
email:sales@cressall.com
http//www.cressall.com
© Cressall Resistors Ltd. 2010

DRAWING TITLE
ES3 GENERAL ARRANGEMENT
DRAWING.No. 103429
SHEET 1 of 1
ISS D