Transmittal, reproduction, dissemination and/or editing of this document as well as utilization of its contents and communication thereof to others without express authorization are prohibited. Offenders will be held liable for payment of damages. All rights created by patent grant or registration of a utility model or design patent are reserved.

Weitergabe sowie Vervielfältigung, Verbreitung und/oder Bearbeitung dieses Dokumentes, Verwertung und Mitteilung seines Inhaltes sind verboten, soweit nicht ausdrücklich gestattet. Zuwiderhandlungen verpflichten zu Schadensersatz. Alle Rechte vorbehalten für Patent-, Gebrauchsmuster- oder Geschmacksmusterertragung vorbehalten.

Confidential secret d'entreprise. Tous droits réservés.
Comunicado como secreto empresarial. Reservados todos os direitos.
[redacted]
Confiado como secreto de empresa. Nos reservamos todos los derechos.

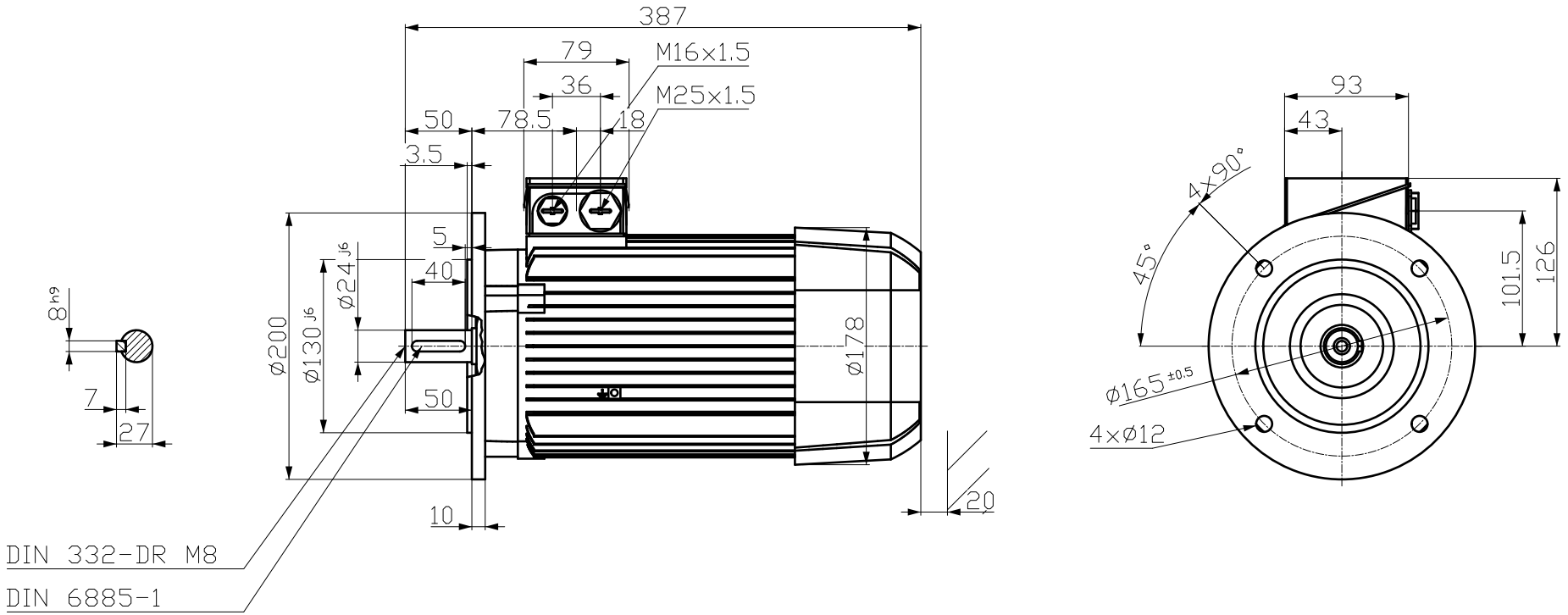

Technische nderungen vorbehalten!
Technical data are subject to change!

Tolerance	Surface	Material	Weight -	Scale mm
1LE1003-0EB42-2FB4 -	Author	Dimensional drawing MaÇzeichnung		
	Creator 6/9/25 SPC			
	Approval Created automatically			
	Department IN LVM			
	Change Order	MLFB	Doc Type	
INNOMOTICS	Doc State Released	Item No	Paper Size A3	
	Revision AA Index RS	Doc No	1st Language en 2nd Language de	
© Innomotics 2025	Project No -	Ref No -	Sheet 1 of 1	

Restricted