No. 617.5604.9593.02

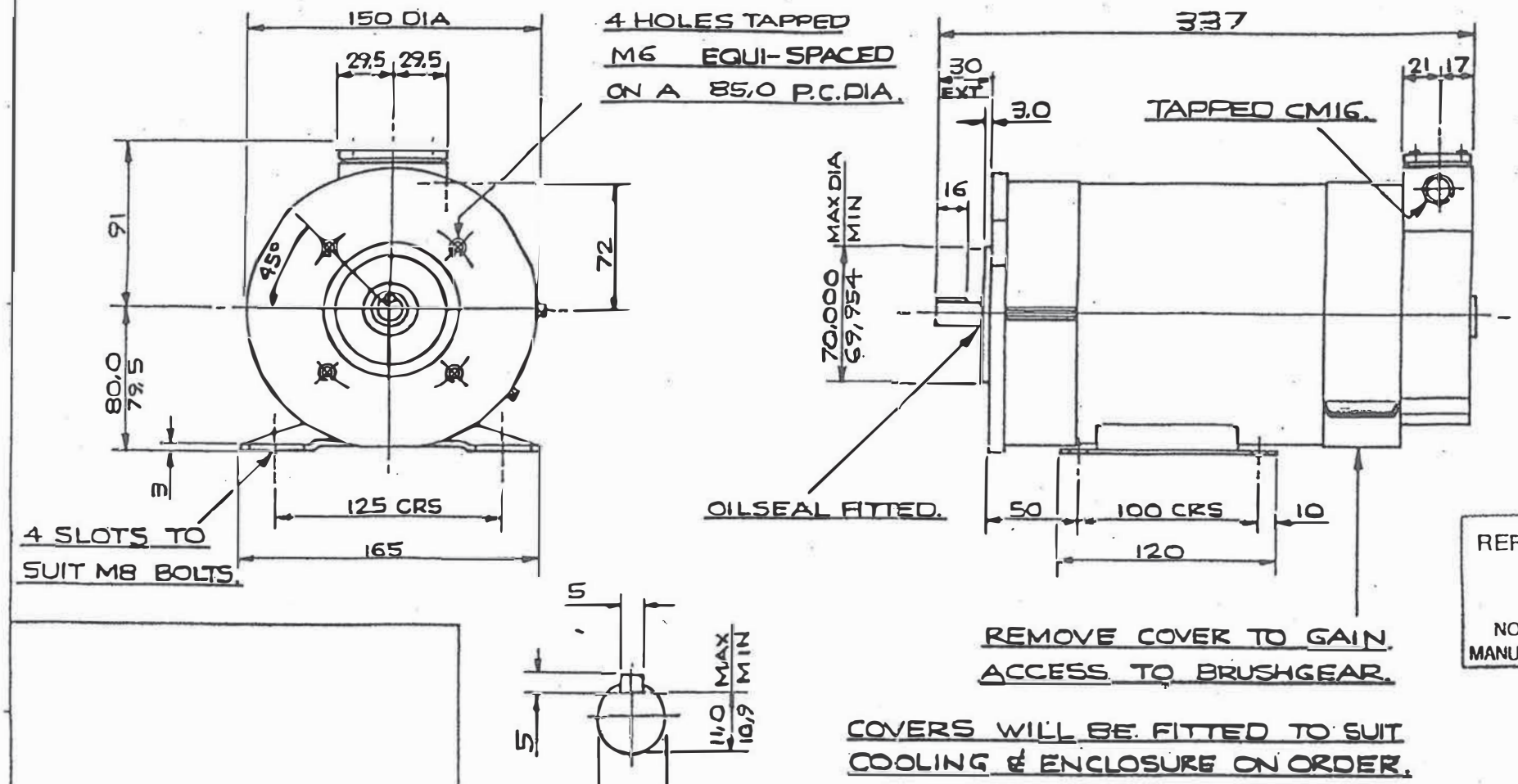

REFERENCE PRINT

NOT TO BE USED FOR MANUFACTURING PURPOSES

COVERS WILL BE FITTED TO SUIT
COOLING & ENCLOSURE ON ORDER.

FRAME.	K.W.	r/min.	ARM V	ARM A	I.P.	I.C.	MASS Kg
MP 80 115							

REV	DATE / INITIALS	REV	DATE / INITIALS	REV	DATE / INITIALS	REV	DATE / INITIALS

ISSUED BY D.S.D.A.
AT BLACKHEATH.
DRN N.R.TAYLOR DATE 12-2
DATE 1-4-2
SIMILAR DRAWINGS.

BROOK CROMPTON U.K.

BLACKHEATH WRKS

OUTLINE DIMENSIONS OF A PERMANENT MAGNET DC MOTOR.

FIRST ORDER No. BB 217869

SCALE —

DRG. No. 617.5604.9593.02

SIZE A3 297 x 420

THIRD ANGLE PROJECTION

CONFIDENTIAL

COPYRIGHT ©1998

GENERAL TOLERANCE NOTES

UNTOLERANCED DECIMAL MACHINING DIMENSIONS ARE TO BE WITHIN THE FOLLOWING LIMITS: (TOL. MUST NOT BE CUMULATIVE)
BORE DIAMETERS SLOT AND RECESS DEPTHS AND WIDTHS: SIZE TO + 0.25mm (+·010")
SHAFT DIAMETERS AND SPIGOT HEIGHTS: SIZE TO −0.25mm (−·010")
CENTRE DISTANCES AND CENTRE TO FACES: SIZE TO ± 0.13mm (± ·005")
MARKED OFF DECIMAL CENTRE DISTANCES AND CENTRES TO FACES: SIZE TO ± 0.25mm (± ·010")

MACHINING NOTES

WHERE MACHINED SURFACES ARE SPECIFIED CLA VALUES ARE GIVEN IN MICROMETRES/MICROINCHES
I.S.O. METRIC THREADS TO BS 3643 PT.2 6g 6H FIT

MV 300303A ED 2072 A