DIMENSIONS IN MILLIMETRES/~~INCHES~~ UNLESS OTHERWISE STATED
DO NOT SCALE OFF DRAWING

DRG. No. 617. 5604. 9555. 01

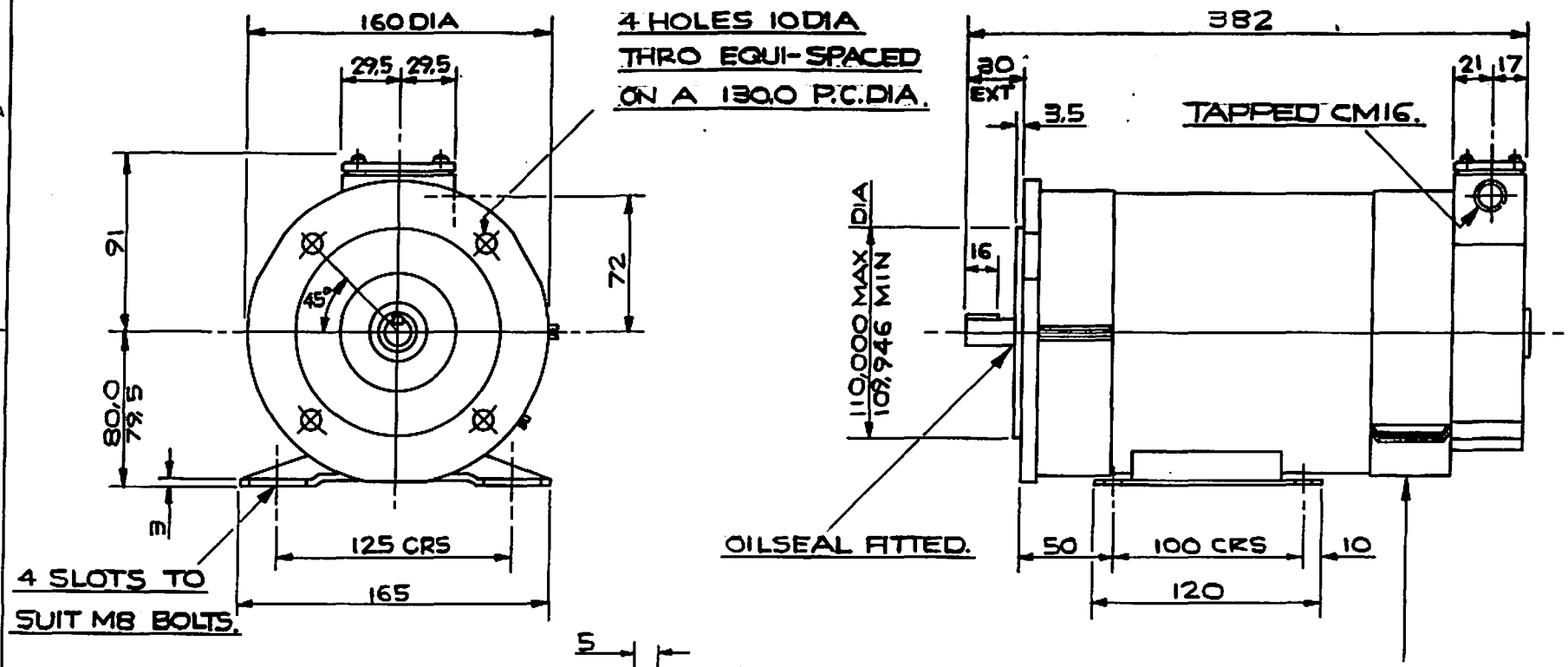

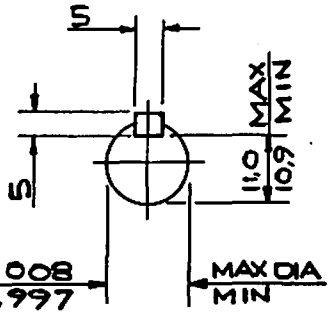

SHAFT END DETAILS.

COVERS WILL BE FITTED TO SUIT COOLING & ENCLOSURE ON ORDER.

FRAME.	K.W.	r/min	ARM V	ARM A	I.P.	I.C.	MASS
MP 80 160							Kg

REV	DATE	REV	DATE	REV	DATE	REV	DATE
	INITIALS		INITIALS		INITIALS		INITIALS

ISSUED BY D.S.D.D.
AT BLACKHEATH.
DR'N. N.R.TAYLOR DATE 20-4
RS DATE 3/9
SIMILAR DRAWINGS
617. 5604. 9355. 11

ELECTRODRIVES

ELECTRODRIVES LTD.

OUTLINE DIMENSIONS OF A PERMANENT MAGNET DC MOTOR.

FIRST ORDER No. 1235 1243

SCALE —

DRG. No. 617. 5604. 9555. 01

SIZE A3 297 x 420

THIRD ANGLE PROJECTION

CONFIDENTIAL

COPYRIGHT ©1993

GENERAL TOLERANCE NOTES

UNTOLERANCED DECIMAL MACHINING DIMENSIONS ARE TO BE WITHIN THE FOLLOWING LIMITS: (TOL. MUST NOT BE CUMULATIVE)
BORE DIAMETERS SLOT AND RECESS DEPTHS AND WIDTHS: SIZE TO +0.25mm (+.010")
SHAFT DIAMETERS AND SPIGOT HEIGHTS: SIZE TO −0.25mm (−.010")
CENTRE DISTANCES AND CENTRE TO FACES: SIZE TO ±0.13mm (±.005")
MARKED OFF DECIMAL CENTRE DISTANCES AND CENTRES TO FACES: SIZE TO ±0.25mm (±.010")

MACHINING NOTES

WHERE MACHINED SURFACES ARE SPECIFIED CLA VALUES ARE GIVEN IN MICROMETRES/MICROINCHES
I.S.O. METRIC THREADS TO BS 3643 PT.2 6g 6H FIT

MY308305R ED 2077 A