MOTORTRONICS™
Solid State AC Motor Control

Innovation in soft start technology

VMX-synergy™

USER MANUAL

MAN-SGY-031. Version 01

VMX-synergy™ user guide

© Motortronics UK Ltd
Bristow House
Gillard Way, Ivybridge
PL21 9GG
UK
www.motortronics-uk.co.uk

© 2019 by Motortronics UK, all rights reserved
Copyright subsists in all Motortronics UK deliverables including magnetic, optical and/or any other soft copy of these deliverables. This document may not be reproduced, in full or in part, without written permission. Enquiries about copyright of Motortronics UK deliverables should be made to Motortronics UK Ltd. If, by permission of the copyright owner, any part of this document is quoted, then a statement specifying the original document shall be added to the quotation. Any such quotation shall be according to the original (text, figure or table) and may not be shortened or modified.

Contents

Safety 8
User Manual Revision Guide 10
1. Mechanical Installation 11
Mounting 11
Requirements for an Enclosure 11
Enclosure Ventilation 11
Altitude 12
Derate 12
Dimensions 13
Mechanical Specification 17
2. Electrical Installation 19
Warnings 19
Isolation 19
Electrical Control Supply Requirements 19
Access 19
Fuse Protection 19
Safety 19
Electrical Supplies 20
Technical Information and Standards 20
Electrical Specifications - Rating Tables 21
Short Circuit Protection 22
Motor Overload Protection 23
Wire Sizes and Torques 24
Electrical Connections 25
Electrical Wiring 26
Three Wire Control 27
User Programmable Control 27
Reversing Configuration 28
Sequential Soft Start Configuration 29
3. Configuration and Parameters 31
Status LED 31
Configuration Overview 31
Auto Setup Procedure 31
Setup by Individual Parameter Settings 31
Configuration from Touchscreen 31

Auto Setup 31
Individual Parameter Setup 31
On Screen Menus 32
Auto-Setup Example 33
Auto-Setup Parameter Settings 34
Auto Reset Function 36
Mapping Auto Reset Status to Digital Outputs 38
Parameter Summary 45
Summary – Parameters for Touchscreen Setup – "Advanced" Category 45
Summary – Parameters for Touchscreen Setup – "I/O" Category 49
Summary – Parameters for Touchscreen Setup – "Monitor" Category 50
Summary – Parameters for Touchscreen Setup – "Log" Category 51
Summary–Parameters forTouchscreenSetup–"Device"Category 53
Auto-Setup Menu 54
Input/Output 82
Monitor 88
Log 94
Device 116
Saving and Loading a VMX-synergy™ Configuration File 123
Saving a Log file 123
Functional Summaries 124
4. Communication 129
Modbus RTU Serial Communications 129
Modbus RTU Communications Interface 129
Modbus RTU Connections 129
Modbus Communications Configuration 130
Transmission Modes 130
Message Structure for RTU Mode 131
Address 131
Function Code 131
Data Field 131
CRC 131
Supported Functions 131
Memory Map 133
Message Timing 134
Modbus TCP 135
VMX-synergy™ Configuration 135

IP Address Configuration 135
TCP Module Front Panel Indicators 137
Modbus TCP Functionality 138
4. Communication (continued) 139
Ethernet IP (M30 module only) 145
VMX-synergy Configuration 145
IP Configuration 145
Ethernet/IP Module Front Panel Indicators 145
Ethernet/IP Functionality 145
Ethernet/IP Control 145
Ethernet /IP (M40 module only) 147
PLC connection and programming guidance 149
Profibus DP 153
VMX-synergy Configuration 153
Device >> Networks >> Profibus 153
Profibus DP Module Front Panel Indicators 153
Profibus DP Module Pinout 154
Profibus DP Control 154
Anybus Module Installation 155
5.Trip and Fault Codes 157
Trip Code Descriptions 157
Fail Safe Codes 160
Main Board Trip (2402 – 2436) 160
Touchscreen Trip (2501 – 2581) 160
Logging Trip (2601 – 2603) 161
6. Intelligent Energy Recovery (iERS) 162
Enabling Intelligent Energy Recovery System (iERS) 162
Principles 162
Advantages of IERS 164
Additional Benefits in Practice 164
How Much Energy? 165
Estimating Energy Savings 166
Basis for estimation 166
Examples of Estimated Saving 166
iERS with VMX-synergy™ 167
7. Applications 168
Motor Suitability and Associated Considerations 168

Suitability 168
Induction Motor Characteristics 168
Rating 168
Maximum Motor Cable Length 169
Power Factor Correction Capacitors 169
Lightly Loaded, Small Motors 169
Motors Fitted with Integral Brakes 169
Older Motors 169
Wound-rotor or Slip-ring Motors 169
Enclosures 169
High-Efficiency Motors 169
EU Compliance with the EMC Directive 169
Fuses 170
Rules for Specific Applications 170
In-Delta Operation 170
High Inertia Loads 170
Frequent Starting 170
iERS 170
Soft-Stopping 170
Reversing Configuration 171
Replacement of Fluid Couplings 171
Two-speed Motor Applications 171
Multiple Motor Starting 171
Overhauling Loads 171
Application Table 172
Concepts and principles of fixed-speed induction motor starting and control 173
Introduction 173
The Induction Motor 173
Starting Induction Motors 176
Electro-Mechanical Methods of Starting 176
The Semiconductor Motor Controller 178
Running Induction Motors 178
Reliability Considerations 180
A1. Soft Starter Sizing 182
Introduction 182
Index Rating 183
Standard Overload Current Profile and Duty Cycle 183

Sizing Chart 185
A2. Glossary of Terms 187
A3. Updating VMX-synergy™ Firmware 189
Introduction 189
Instruction for Updating 189
A4. User Serviceable Items 192
Fan Replacement 192
Replacement Fan Part Numbers 192
Fan Replacement Procedure – VMX-SGY-101 thru VMX-SGY-305 192
Fan Replacement Procedure – VMX-SGY-307 and VMX-SGY-309 194
LCD Touchscreen Replacement 195
A5. Remote Keypad Setup – VMX-SGY-010 197
Introduction 197
Network Connection 197
Network Connection 198
Remote Keypad Operation 199

Safety

Important information

Installers should read and understand the instructions in this guide prior to installing, operating and maintaining the soft start. The following symbols may appear in this guide or on the soft start to warn of potential hazards or to draw attention to certain information.

Dangerous Voltage

Indicates the presence of a hazardous voltage which could result in personal injury or death.

Tension dangereuse

Indique la présence d'une tension dangereuse qui peut entaîner des blessures ou la mort.

Warning/Caution

Indicates a potential hazard. Any instructions that follow this symbol should be obeyed to avoid possible damage to the equipment, and personal injury or death.

Avertissement/Mise en garde

Indique un danger potentiel. Toutes les instructions suivant ce symbole doivent être observées, afin d'éviter les dommages de l'équipement et les blessures ou la mort.

Protective Earth (Ground)

Indicates a terminal which is intended for connection to an external conductor for protection against electric shock in case of a fault.

Mise à la terre (Masse)

Indique une borne dont l'usage prévu est d'être connecter à conducteur externe pour assurer la protection contre les chocs électriques en cas de défauts.

Caution Statements

The examples and diagrams in this manual are included solely for illustrative purposes. The information contained in this manual is subject to change at any time and without prior notice. In no event will responsibility or liability be accepted for direct, indirect or consequential damages resulting from the use or application of this equipment.

Mises en garde

Les exemples et les schémas de ce manuel ne sont donnés qu'à titre illustratif. Les informations présentées dans ce manuel peuvent être modifiées sans avis préalable. En aucun cas nous n'assumons la responsabilité ou l'obligation pour les dommages directs, indirects ou consécutifs qui résultent de l'utilisation ou application de cet équipement.

Short Circuit

Motortronics UK soft starts are not short circuit proof. After severe overload or short circuit, the operation of the soft start should be fully tested by an authorised service agent.

Court-circuit

Les démarreurs progressifs Motortronics UK ne sont pas à l'épreuve des courts-circuits. Après une forte surcharge ou un court-circuit, le fonctionnement du démarreur progressif doit être intégralement vérifié par un agent de maintenance agréé.

Safety (continued)

VMX-synergy™ soft starts contain dangerous voltages when connected to the mains supply. Only qualified personnel that have been completely trained and authorised, should carry out installation, operation and maintenance of this equipment.

Les démarreurs progressifs VMX-synergy™ contiennent des tensions dangereuses, lorsqu'ils sont connectés à la tension secteur. Les activités d'installation, d'utilisation et d'entretien de cet équipement doivent être effectuées par un personnel qualifié, dûment formé et habilité.

Installation of the soft start must be made in accordance with existing local and national electrical codes and regulations and have a minimum protection rating.

Le démarreur progressif doit être installer conformément au code local et nationale d'électricité et à la réglementation en vigueur, et il doit avoir un indice de protection minimal.

It is the responsibility of the installer to provide suitable grounding and branch circuit protection in accordance with local electrical safety codes.

Il appartient à l'installeur d'assurer la mise à la terre et la protection du circuit de branchement, conformément au code de sécurité électrique local.

This soft start contains no serviceable or re-usable parts.

Ce démarreur progressif ne contient pas de pièces réparables ou réutilisables

The STOP function of the soft start does not isolate dangerous voltages from the output of the soft start. An approved electrical isolation device must be used to disconnect the soft start from the incoming supply before accessing electrical connections.

La fonction STOP du démarreur progressif n'isole pas les tension dangereuses en sortie du démarreur progressif. Avant d'accéder aux raccordement électriques, il faut utiliser un dispositif d'isolation électrique approuvé pour déconnecter le démarreur progressif de la tension d'entrée.

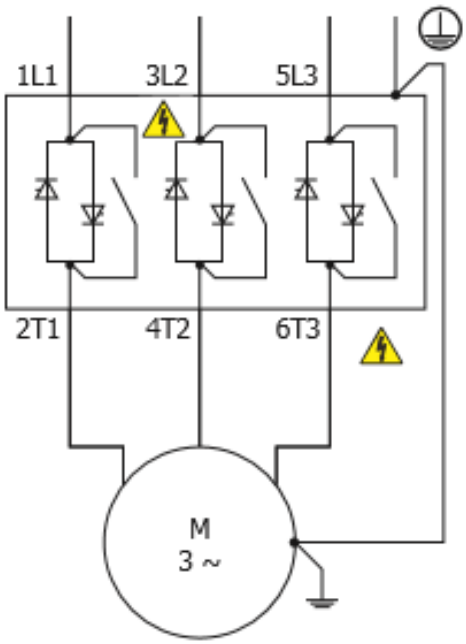

User Manual Revision Guide

Revision History		
Version	**Date**	**Description of Changes**
1.0	27/07/2016	Original Issue
2.0	19/08/2016	Corrections
3.0	14/03/2018	Additions
4.0	04/08/2018	Additions
5.0	04/10/2018	Corrections and additions

1. Mechanical Installation

Mounting

Fix the unit to a flat, vertical surface using the mounting holes (or slots) on its base-plate. The mechanical outline diagrams give the dimensions and mounting hole positions for each model. Ensure that:

- The orientation of the unit has the 'TOP' uppermost.
- The location allows adequate front access.
- You can view the touchscreen.
- Do not install other equipment that generates a lot of heat close to the soft starter.

Requirements for an Enclosure

For a typical industrial environment, an enclosure would provide the following:

- A single location for the unit and its protection/isolation switch-gear
- The safe termination of cabling and/or busbars

Means to effect proper air flow through the enclosure.

Enclosure Ventilation

When fitting VMX-synergy™ into a cabinet, ventilation must be provided if the heat output of the unit is greater than the cabinet will dissipate. Use the following formula to determine the fan requirement. An allowance has been incorporated into the formula so that the figure for Q is the air delivery in the fan suppliers' data.

The maximum power dissipation occurs when energy saving. Heat dissipated can be approximated with the formula:

Watts (synergy™) = 1/2 x VMX-synergy™ current rating x 3

Ventiltion intérieure

Lorsque VMX-synergy™ est installé dans une armoire, il faut assurer sa ventilation, si la chaleur produite de l'unité est plus important que la capacité de dissipation de l'armoire. Utiliser la formule suivante pour déterminer la demande de ventilateur. Une tolérence a été incorporé dans la formule, ainsi la figure donnée dans Q est le débit d'air indiqué dans les données du fournisseur du ventilateur.

La puissance maximale de dissipation est atteint en mode économie d'énergie. La chaleur dissipée peut être estimée par la formule suivante:

Watts (VMX-synergy™) = 1/2 x courant nominal VMX-synergy™ x 3

1. Mechanical Installation (continued)

$$Q = (4 \times W_t / (T_{max} - T_{amb})$$

Q = volume of air (cubic metres per hour-m3/h)

Wt = Heat produced by the unit and all other heat sources within the enclosure (Watts) T_{max} = Maximum permissible temperature within the enclosure (for a fully rated VMX-synergy™: Models **VMX-SGY 101-309** = 50°C, models **401 – 505** = 40°C)

T_{amb} = Temperature of the air entering the enclosure (°C). If you prefer to work in CFM, substitute °F for °C. Q is now in CFM

Q = quantité d'air (mètre cube par heure - m3/h)

Wt = Chaleur produite par l'unité et toutes autres sources de chaleur dans l'armoire (Watts) Tmax = Température maximale admissible dans l'armoire (50°C pour VMX-synergy™ en puissance maximale)

T_{amb} = Température de l'air entrant dans l'armoire (°C). Pour calculer en CFM, remplacer °C par °F. Ainsi Q est en CFM

Altitude

Altitude above sea level 1000m (3281ft). Above 1000m de rate by 1% of VMX-synergy™ Ie per 100m (328ft) to a maximum altitude of 2000m (6562ft).

Derate

VMX-SGY-101 to VMX-SGY-309

-20°C [-4°F] to 50°C [122°F]; above 50°C derate linearly by 4% of VMX-SYNERGY™ Ie per °C to a maximum of 60°C (140°F)

VMX-SGY-401 to VMX-SGY-505

-20°C [-4°F] to 40°C [104°F]; above 40°C derate linearly by 2% of VMX-SYNERGY™ Ie per °C to a maximum of 60°C (140°F)

1. Mechanical Installation (continued)

Dimensions

VMX-synergy™ Size 1, VMX-SGY-101 to VMX-SGY-117

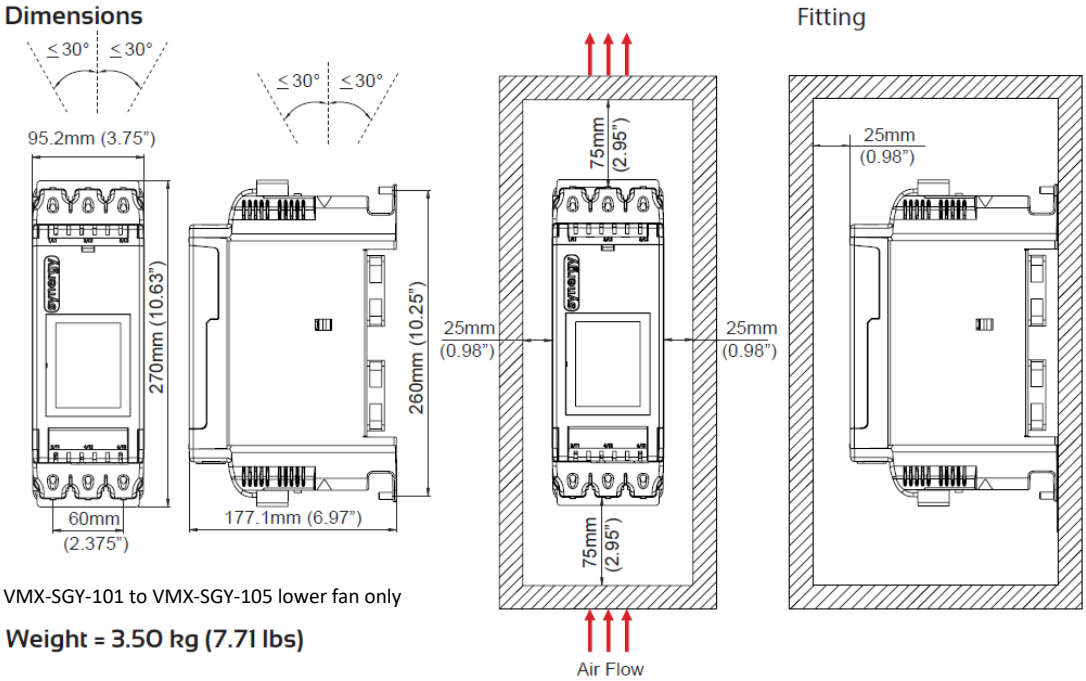

VMX-SGY-101 to VMX-SGY-105 lower fan only

Weight = 3.50 kg (7.71 lbs)

VMX-synergy™ Size 2, VMX-SGY-201 to VMX-SGY-205

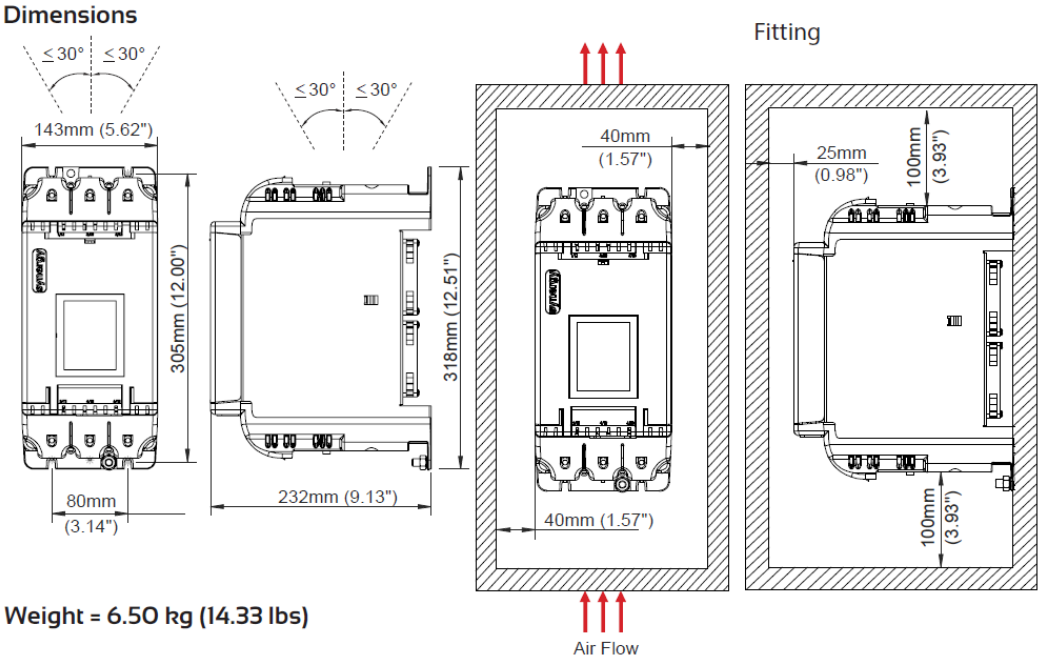

Weight = 6.50 kg (14.33 lbs)

1. Mechanical Installation (continued)

Dimensions (continued)

VMX-synergy™ Size 3, VMX-SGY-301 to VMX-SGY-305

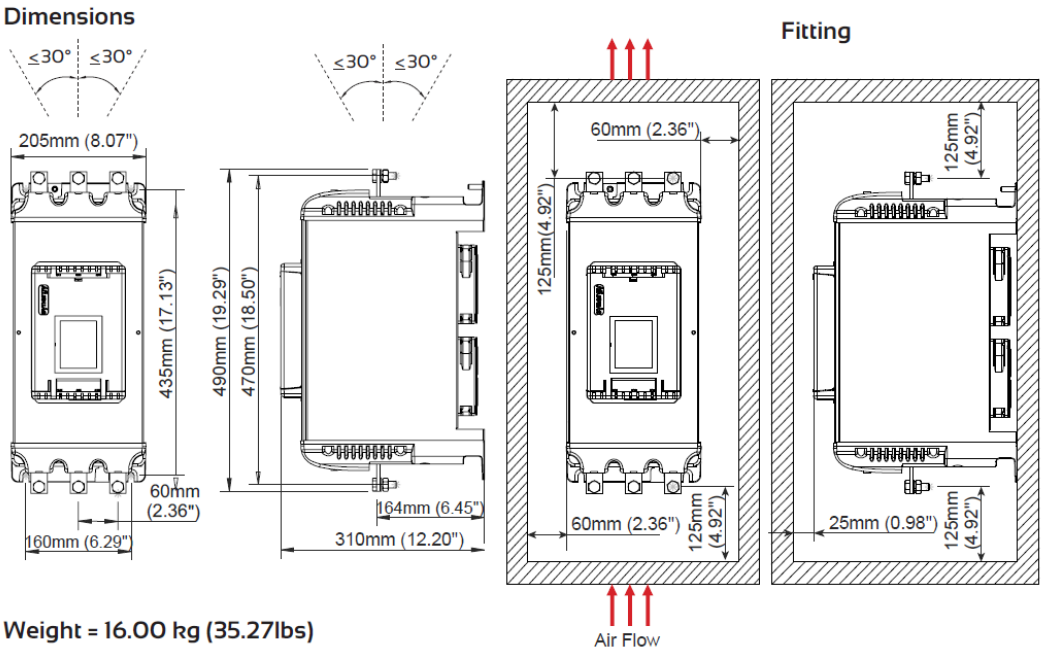

Weight = 16.00 kg (35.27lbs)

VMX-synergy™ Size 3, VMX-SGY-307 to VMX-SGY-309

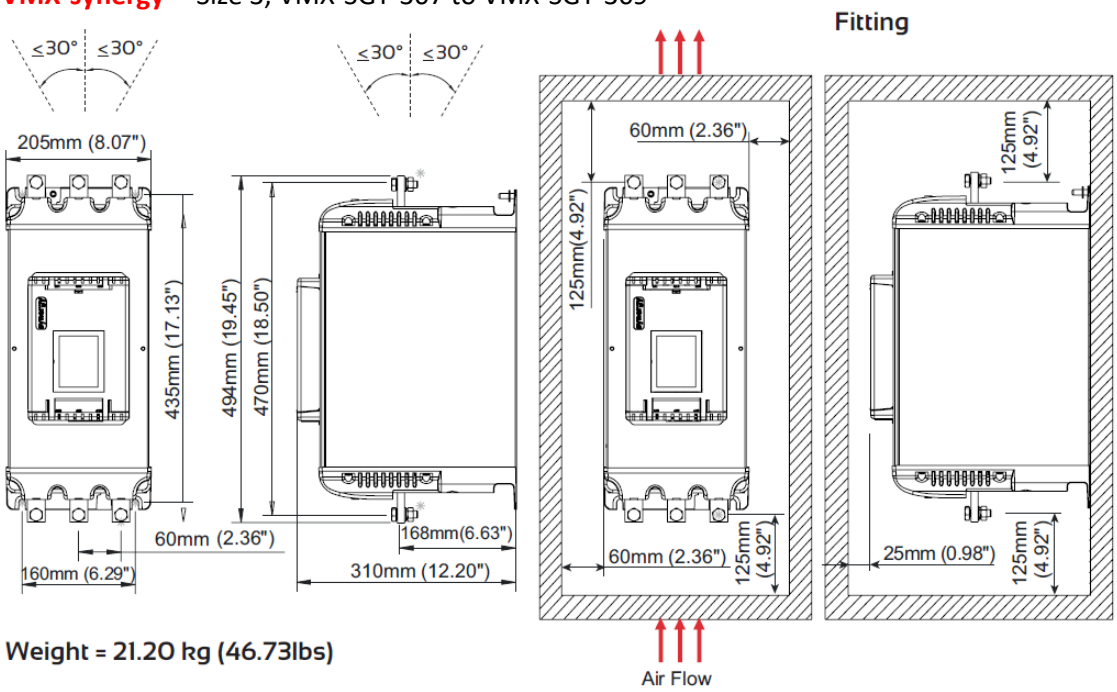

Weight = 21.20 kg (46.73lbs)

1. Mechanical Installation (continued)

Dimensions (continued)

VMX-synergy™ Size 4, VMX-SGY-401 to VMX-SGY-403

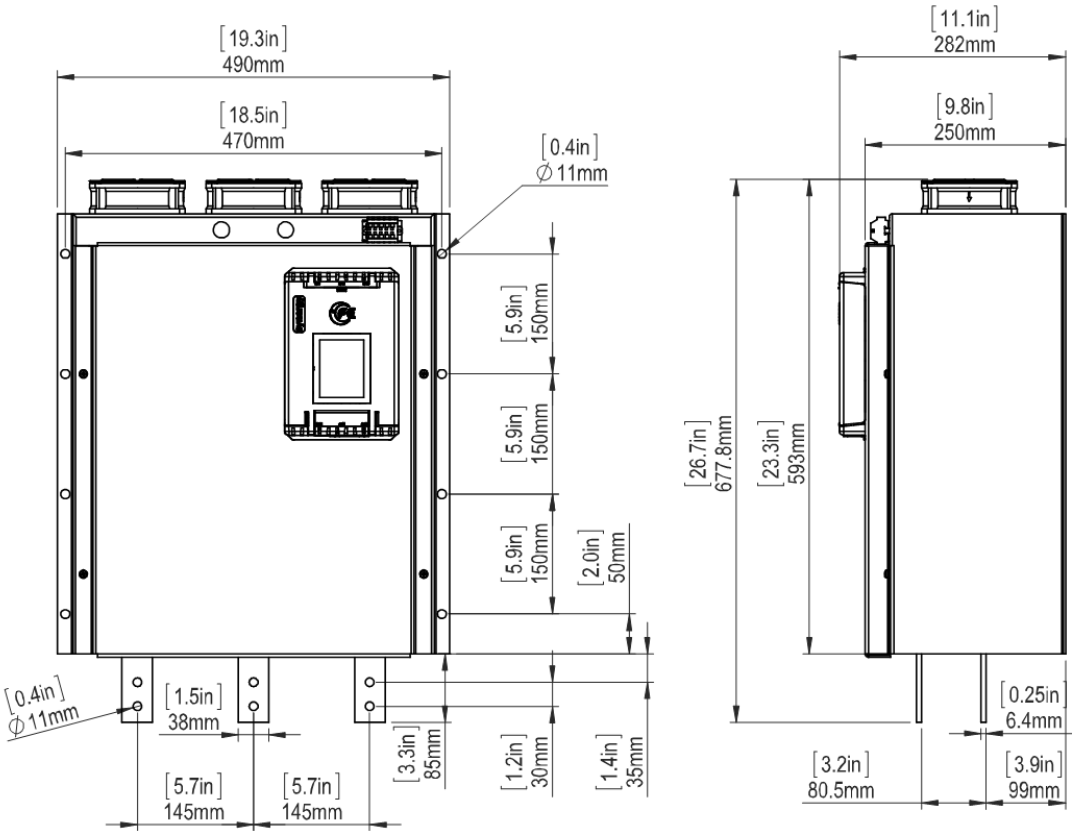

Weight 65kg (143.3lbs)

1. Mechanical Installation (continued)

Dimensions (continued)

VMX-synergy™ Size 5, VMX-SGY-501 to VMX-SGY-505

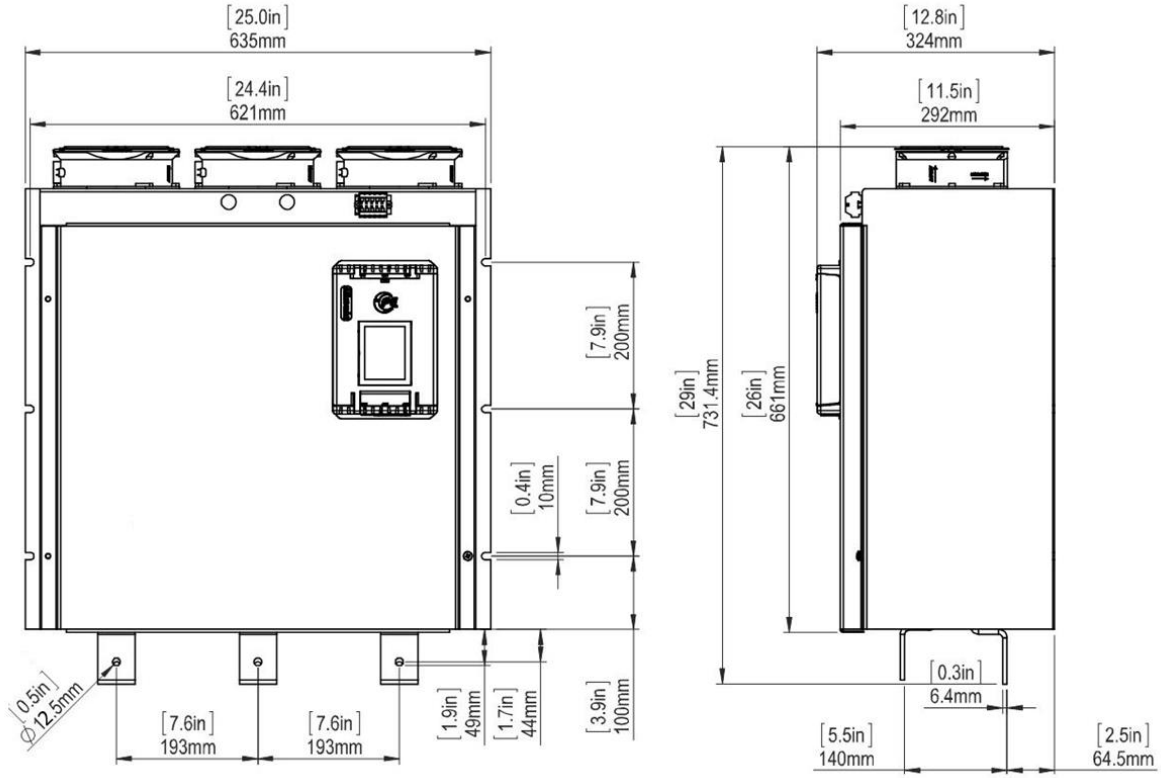

Weight 72kg (158.7lbs)

1. Mechanical Installation (continued)

Mechanical Specification

Mechanical Specifications									
Model (VMX-SGY-)	101	103	105	107	109	111	113	115	117
Frame Size	1								
Heat output @ FLC (W)	25.5	31.5	40.5	51.0	60.0	78.0	97.5	116	114
Weight kg [lb]	3.0 [6.6]			3.5 [7.7]					
Model (VMX-SGY-)	201	203	205	301	303	305	307	309	-
Frame Size	2			3					-
Heat output @ FLC (W)	186	234	270	363	453	542	621	716	-
Weight kg [lb]	5.5 [12.1]	6.5 [14.3]		16.0 [35.3]			21.2 [46.7]		-
Model (VMX-SGY-)	401	403	501	503	505	-			
Frame Size	4		5			-			
Heat output (W)	1830	2166	2500	2880	3240	-			
Weight kg [lb]	65 [143.3]		72 [158.7]			-			
Model	Models VMX-SGY-101 to 309								
Ambient Operating Temp.	-20°C [-4°F] to 50°C [122°F]; above 50°C derate linearly by 4% of VMX-SYNERGY™ Ie per °C to a maximum of 60°C (140°F)								
Transportation and Storage Temperature	-25°C to 70°C [-13°F to 158°F] continuous								
Humidity	max 85% non-condensing, not exceeding 50% @ 40°C [104°F]								
Maximum Altitude	1,000m [3281ft]; above 1000m derate by 1% of VMX-synergy™ I_e per 100m (328ft) to a maximum altitude of 2,000m (6562ft)								
Environmental Rating	Main Circuit: IP00 (IP20 with optional finger guards for sizes 1&2 only); Control Circuit: IP20; No corrosive gases permitted								
Model	Models VMX-SGY-401 to 505								
Ambient Operating Temp.	20°C [-4°F] to 40°C [104°F]; above 40°C derate linearly by 2% of VMX-SYNERGY Ie per °C to a maximum of 60°C (140°F)								
Transportation and Storage Temperature	-25°C to 70°C [-13°F to 158°F] continuous								
Humidity	max 85% non-condensing, not exceeding 50% @ 40°C [104°F]								
Maximum Altitude	1,000m [3281ft]; above 1000m derate by 1% of VMX-synergy™ Ie per 100m (328ft) to a maximum altitude of 2,000m (6562ft)								
Environmental Rating	Main Circuit: IP00; Control Circuit: IP20; No corrosive gases permitted								

Blank Page

2. Electrical Installation

Chapter 2

Warnings

Isolation

Caution: VMX-synergy™ uses semiconductor devices in the main circuit and is not designed to provide isolation. For this reason, isolation means must be installed in the supply circuit in accordance with the appropriate wiring and safety regulations.

Electrical Control Supply Requirements

All electrical connections are made to power input and output terminals, control terminals and an earth stud.

Access

No user accessible internal parts.

Fuse Protection

The Mains Supply and the Control Supply each require protection. Although all VMX-synergy™ units have electronic overload protection for the Soft Start, the installer should always fit fuses or circuit breakers, between the unit and the Mains Supply, not between the unit and the motor. Semiconductor fuses can be supplied as an option for short-circuit protection of the semiconductors. It is the responsibility of the installer and system designer/specifier to ensure that the required standards or regulations are complied with.

Safety

VMX-synergy™ soft starters contain hazardous voltages when connected to the electrical power supply. Only qualified personnel who are trained and authorized should carry out installation, operation and maintenance of this equipment. Refer to and carefully follow all of the 'Warnings' section at the start of this user manual, as well as other warnings and notes throughout the manual.

2. Electrical Installation (continued)

Electrical Supplies

The unit requires a 3-phase balanced Mains Supply to provide the power for the controlled motor. A single-phase supply: 115V to 230V, 50Hz/60Hz, or 24Vdc for the internal control circuitry. The unit will not operate unless the control supply voltage is within the specified limits.

Technical Information and Standards

All VMX-synergy™ models are CE, REACH, and RoHS compliant. VMX-synergy™ models bear the ETL listing mark and are UL508 and CSA C22.2 No. 14, per ETL, listed to U.S. and Canadian safety standards respectively.

VMX-synergy™ Technical Information and Standards			
Rated Operational Voltages	U_e	200Vac to 480Vac	
Rated Operational Current	I_e	See Electrical Specifications table	
Rating Index		VMX-SGY-101 to 205	I_e: AC-53a: 3.5-17: 90-5
		VMX-SGY-301 to 309	I_e: AC-53a: 3.5-17: 90-3
		VMX-SGY-401 to 505	I_e: AC-53a: 3.5-17: 60-3
Rated Frequency		50/60Hz	
Rated Duty		Uninterrupted	
IEC 60947-4-2 Form Designation		Form 1 internally bypassed	
Rated Insulation Voltage	U_i	480V	
Rated Impulse Withstand Voltage	U_{imp}	Main circuit	4kV
		Control supply circuit	2.5kV
IP Code		Main AC line/load circuit	IP00 (IP20 with optional finger guards VMX-SGY-101 to VMX-SGY-205)
		Supply and control circuit	IP20
Pollution Degree		2	
Rated conditional short-circuit current and type of coordination with associated short- circuit protective device (SCPD).		Type 1 coordination. See short-circuit protection table for rated conditional short-circuit current and required current rating and characteristics of the associated SCPD	
Rated Control Circuit Voltage (programmable)	U_C	24Vdc, 110Vac or 230Vac	Protect with 4A UL Listed fuse
Rated Control Supply Voltage	U_S	See Electrical Specifications table	
Relay Specification		AC-15 230Vac, 1A	
		DC-13 30Vdc, 0.7A	
EMC Emission Levels	EN 55011	Class A	
EMC Immunity Levels	IEC 61000-4-2	8kV/air discharge or 4kV/contact discharge	
	IEC 61000-4-3	10 V/m	
	IEC 61000-4-4	2kV/5kHz (main power and ports)	
		1kV/5kHz (signal ports)	
	IEC 61000-4-5	2kV line-to-ground	
		1kV line-to-line	
	IEC 61000-4-6	10V	

2. Electrical Installation (continued)

Electrical Specifications - Rating Tables

Frame Size 1, 2 and 3									
Type	IEC, I_e	kW [1]		UL, FLA	Hp [2]				
	A [3]	230V	400V	A [4]	200V	208V	220-240V	440-480V	U_s
VMX-SGY-101-4-01	17	4	7.5	17	3	5	5	10	24Vdc, 110Vac to 230Vac
VMX-SGY-103-4-01	22	5.5	11	21	5	5	5	15	
VMX-SGY-105-4-01	29	7.5	15	27	7.5	7.5	7.5	20	
VMX-SGY-107-4-01	35	7.5	18.5	34	10	10	10	25	
VMX-SGY-109-4-01	41	11	22	40	10	10	10	30	
VMX-SGY-111-4-01	55	15	30	52	15	15	15	40	
VMX-SGY-113-4-01	66	18.5	37	65	20	20	20	50	
VMX-SGY-115-4-01	80	22	45	77	20	25	25	60	
VMX-SGY-117-4-01	100	30	55	96	30	30	30	75	
VMX-SGY-201-4-01	132	37	75	124	40	40	40	100	
VMX-SGY-203-4-01	160	45	90	156	50	50	60	125	
VMX-SGY-205-4-01	195	55	110	180	60	60	60	150	
VMX-SGY-301-4-01	242	75	132	242	75	75	75	200	
VMX-SGY-303-4-01	302	90	160	302	100	100	100	250	
VMX-SGY-305-4-01	361	110	200	361	125	125	150	300	
VMX-SGY-307-4-02	430	132	250	414	150	150	150	350	110Vac
VMX-SGY-309-4-02	500	150	280	477	150	150	150	400	
VMX-SGY-307-4-03	430	132	250	414	150	150	150	350	230Vac
VMX-SGY-309-4-03	500	150	280	477	150	150	150	400	

1) Rated operational powers in kW according to IEC 60072-1 (primary series) corresponding to IEC current rating.
2) Rated operational powers in hp according to UL508 corresponding to FLA current rating.
3) The IEC, Ie rating applies for EN 60947-4-2 max rating index 195A: AC-53a: 3.5-17: 90-5 and 500A: AC-53a: 3.5-17: 90-3
4) The UL, FLA rating applies for a maximum surrounding air temperature of 50°C.

Frame Size 4 and 5									
Type	IEC, I_e	kW [1]		UL,FLA	Hp [2]				U_s
	A [3]	230V	400V	A [4]	200V	208V	220-240V	440-480V	
VMX-SGY-401-4-02	610	200	355	590	200	200	200	500	110Vac
VMX-SGY-403-4-02	722	220	400	722	250	250	300	600	
VMX-SGY-501-4-02	850	280	500	840	300	300	350	700	
VMX-SGY-503-4-02	960	315	560	960	300	350	400	800	
VMX-SGY-505-4-02	1080	355	630	1080	350	400	450	900	
VMX-SGY-401-4-03	610	200	355	590	200	200	200	500	230Vac
VMX-SGY-403-4-03	722	220	400	722	250	250	300	600	
VMX-SGY-501-4-03	850	280	500	840	300	300	350	700	
VMX-SGY-503-4-03	960	315	560	960	300	350	400	800	
VMX-SGY-505-4-03	1080	355	630	1080	350	400	450	900	

Rated operational powers in kW according to IEC 60072-1 (primary series) corresponding to IEC current rating
Rated operational powers in hp based on Table 430.250 of the National Electrical Code, 2005® corresponding to FLA current rating.
Ie rating applies for EN 60947-4-2 max rating index 1080A: AC-53a: 3.5-17: 60-3
Ratings apply for a maximum surrounding air temperature of 40°C.

2. Electrical Installation (continued)

Short Circuit Protection

Type designation (eg VMX-SGY-101-4-01)			VMX-SGY-101	VMX-SGY-103	VMX-SGY-105	VMX-SGY-107	VMX-SGY-109	VMX-SGY-111	VMX-SGY-113	VMX-SGY-115	VMX-SGY-117
Rated operational currents	I_e	A	17	22	29	35	41	55	66	80	100
Rated conditional short circuit current	I_q	kA	5	5	5	5	5	5	5	10	10
Class J time-delay fuse #1	Maximum rating Z_1	A	30	40	50	60	70	100	125	150	175
UL Listed inverse-time delay circuit breaker #1	Maximum rating Z_2	A	60	60	60	60	60	150	150	250	300
Semiconductor fuse (class aR) #2	Type		Mersen 6,9 URD 30__ Bussmann 170M30__ Bussmann 170M31__ Bussmann 170M32__ SIBA 20 61___								
	Fuse rating	A	100A	100A	160A	160A	160A	200A	200A	250A	315A

Type designation (eg VMX-SGY-201-4-01)			VMX-SGY-201	VMX-SGY-203	VMX-SGY-205	VMX-SGY-301	VMX-SGY-303	VMX-SGY-305	VMX-SGY-307	VMX-SGY-309
Rated operational currents	I_e	A	132	160	195	242	302	361	430	500
Rated conditional short circuit current	I_q	kA	10	10	10	18	18	18	18	18
Class J time-delay fuse #1	Maximum rating Z_1	A	225	300	350	450	500	500	600	600
UL Listed inverse-time delay circuit breaker #1	Maximum rating Z_2	A	350	450	500	700	800	1000	1000	1000
Semiconductor fuse (class aR) #2	Type		Mersen 6,9 URD 31__ Bussmann 170M40__ Bussmann 170M41__ Bussmann 170M42__ SIBA 20 61___			Mersen 6,9 URD 33__ Bussmann 170M60__ Bussmann 170M61__ Bussmann 170M62__ SIBA 20 63___				
	Fuse rating	A	400A	550A	550A	700A	800A	900A	1000A	1100A

#1 Suitable For Use On A Circuit Capable Of Delivering Not More Than ___I_q___ rms Symmetrical Amperes, 480 Volts Maximum, When Protected by Class J time delay Fuses with a Maximum Rating of ___Z_1___ or by a Circuit Breaker with a Maximum Rating of ___Z_2___

#2 Correctly selected semiconductor fuses can provide additional protection against damage to the VMX-synergy™ unit (this is sometimes referred to as type 2 co-ordination). These semiconductor fuses are recommended to provide this increased protection.

2. Electrical Installation (continued)

Short Circuit Protection (continued)

Type designation (eg VMX-SGY-401-4-02)			VMX-SGY-401	VMX-SGY-403	VMX-SGY-501	VMX-SGY-503	VMX-SGY-505
Rated operational currents	I_e	A	610	722	850	960	1080
Rated conditional short circuit current	I_q	kA	30	30	42	42	42
Semiconductor fuse (class aR) #2	Bussmann Type		170M5466		170M6467		
	Siba Type		2067132.1000A		2068132.1400A		

Motor Overload Protection

VMX-synergy™ provides full motor overload protection, configurable through the user interface. Overload trip settings are determined by the Motor Current setting and the Trip Class setting. Trip class choices are Class 10, Class 20, and Class 30.

The VMX-synergy™ soft starters are protected using full I^2t motor overload with memory. See Appendix 1 for sizing guide.

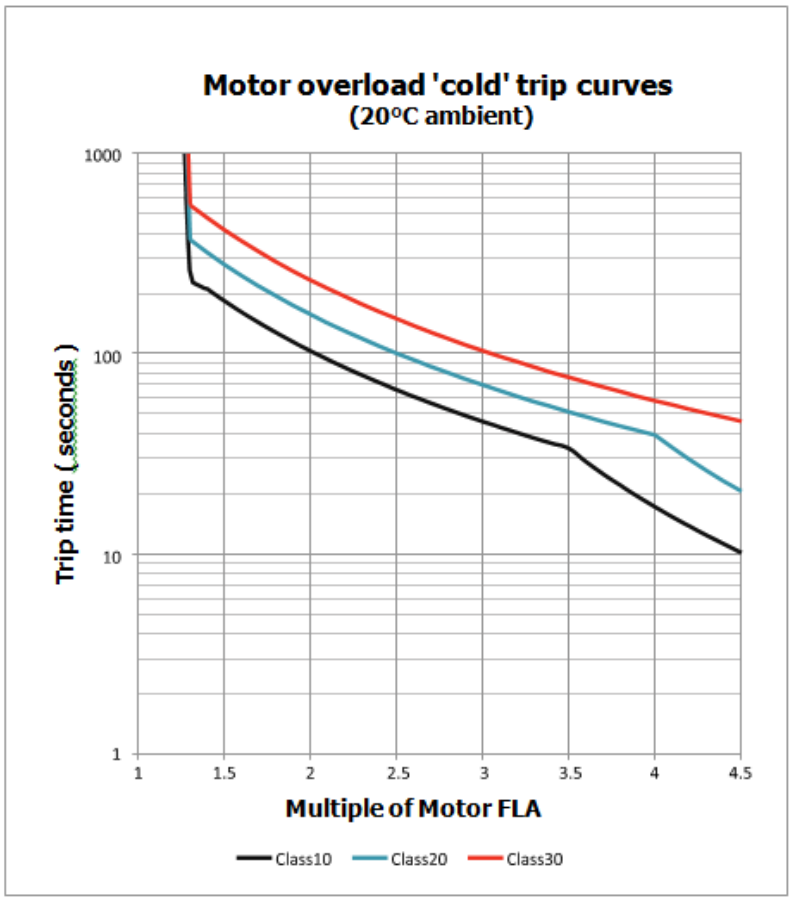

2. Electrical Installation (continued)

Wire Sizes and Torques

Terminal		Models	Wire/Busbar Size		Torque	
			Metric	Imperial	Nm	lb-in
Main Terminals Cu STR 75°C only	Terminal	VMX-SGY-101 to VMX-SGY-117	2.5 - 70mm²	12- 2/0AWG	9	80
		VMX-SGY-201 to VMX-SGY-205	4 - 185mm²	12 – 350MCM	14	123
	M10 bolt	VMX-SGY-301 to VMX-SGY-305	2 x 95mm²	2 x 2/0AWG		
		VMX-SGY-307 to VMX-SGY-309	2 x 150mm²	2 x 350MCM		
Main Terminals [2)] Copper busbar	2 x M10 bolt	VMX-SGY-401 to VMX-SGY-403	50mm x 10mm	1.5in x 0.5in		
	M12 bolt	VMX-SGY-501 to VMX-SGY-503	60mm x 10mm	2.0in x 0.5in		
		VMX-SGY-505	80mm x 10mm	2.5in x 0.5in		
Control terminals		All models	0.2–1.5mm²	24-16AWG	0.5	4.5
Protective Earth [1)] Cu only	M6 stud	VMX-SGY-101	≥ 4mm²	≥ 12AWG	8	70
		VMX-SGY-103 to VMX-SGY-111	≥ 6mm²	≥ 10AWG		
		VMX-SGY-113 to VMX-SGY-117	≥ 10mm²	≥ 8AWG		
	M8 stud	VMX-SGY-201 to VMX-SGY-205	≥ 16mm²	≥ 6AWG	12	105
		VMX-SGY-301	≥ 25mm²	≥ 4AWG		
		VMX-SGY-303 to VMX-SGY-305	≥ 35mm²	≥ 3AWG		
		VMX-SGY-307 to VMX-SGY-309	≥ 35mm²	≥ 2AWG		
		VMX-SGY-401 to VMX-SGY-403	≥ 70mm²	≥ 1/0AWG		
	M10 stud	VMX-SGY-501 to VMX-SGY-505	≥ 70mm²	≥ 2/0AWG		
		VMX-SGY-505	≥ 95mm²	≥ 3/0AWG		

Protective Earth wire size based on bonding conductor requirements of UL508 Table 6.4 and UL508A Table 15.1.

Maximum busbar sizes based on IEC 60947-1 Table 11. The actual conductor used must comply with local wiring regulations.

2. Electrical Installation (continued)

Electrical Connections

⚠	Required rating	Programmable	Default	Description
#1				Group 1 input common
#1	SEE TABLE 1, U_C	yes	start/stop	opto-coupled input
#1	SEE TABLE 1, U_C	yes	None	opto-coupled input
				group 2 input common
	SEE TABLE 1, U_C	yes	reset	opto-coupled input
				not used
	3 x PTC in series (130°C)		OFF	thermistor
	3 x PTC in series (130°C)		OFF	thermistor
				signal ground
#3	SEE TABLE 1, U_S			control supply
#3	SEE TABLE 1, U_S			control supply

Representative of terminal label. See TABLE 1, U_S for AC supply rating as marked **on actual VMX-synergy™ model**

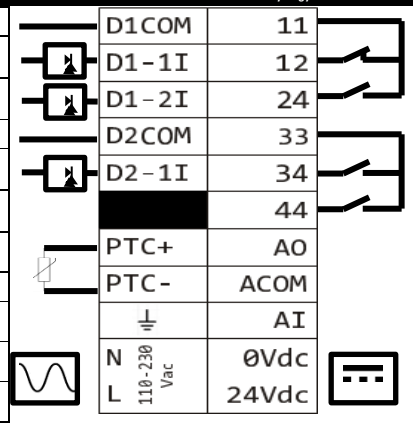

Description	Default	Programmable	Required rating	⚠
group 1 relay common				
relay N/C	fault	yes	230Vac 1A AC15, 30Vdc 0.5A Resistive	
relay N/O	fault	yes	230Vac 1A AC15, 30Vdc 0.5A Resistive	
group 2 relay common				
relay N/O	running	yes	230Vac 1A AC15, 30Vdc 0.5A Resistive	
relay N/O	end of start	yes	230Vac 1A AC15, 30Vdc 0.5A Resistive	
analog output	0-10V	yes	0 to 10V 10mA/ 4-20mA	
analog 0V			0V	
analog input	0-10V	Yes	0 to 10V 10mA/ 4-20mA	
control supply			SEE TABLE 1, U_S	#3
control supply			SEE TABLE 1, U_S	#3

Model No (s):	Us (+10% -15%)	Uc (+10% -15%)	Notes
VMX-SGY-101-4-01 to VMX-SGY-305-4-01	110 - 230Vac or 24Vdc	⚠ 110Vac or 230Vac or 24Vdc.	The system can have either a 110/230V acmains or 24Vdc input NOT both.
VMX-SGY-307-4-02/VMX-SGY-309-4-02	110Vac	230Vac factory default.	*Le système peut avoir soit une alimentation principale de 110/230 Vac ou de 24 Vdc, mais en aucun cas les deux simultanement.*
VMX-SGY-307-4-03/VMX-SGY-309-4-03	230Vac	*230Vac défaut d'usine #4*	
VMX-SGY-401-4-02 to VMX-SGY-505-4-02	110Vac		
VMX-SGY-401-4-03 to VMX-SGY-503-4-03	230Vac		

24Vdc Specification
24Vdc 60W
Residual ripple 100mV
Spikes/switching Peaks 240mV
Turn On/Off response
No overshoot of V out
Overvoltage voltage protection
output voltage must be clamped to <30Vdc

Notes	
#1	**The programmed digital input setting on D1COM, D1-1I, D1-2I must correspond to the voltage applied to these terminals to avoid risk of damage to the equipment.** **Afin d'éviter d'endommager l'équipement, le réglage de l'entrée numérique programmé sur D1COM, D1-1I, D1-2I doit correspondre à la tension appliquée à ces bornes.**
#2	**The programmed digital input setting on D2COM, D2-1I must correspond to the voltage applied to these terminals to avoid risk of damage to the equipment.** ***Afin d'éviter d'endommager l'équipement, le réglage de l'entrée numérique programmé sur D2COM, D2-1I doit correspondre à la tension appliquée à ces bornes.***
#3	**The control supply can be 110 to 230Vac applied to the N, L terminals or 24Vdc applied to the 0Vdc, 24V input terminals. The correct voltage as specified must only be applied to one of these supply inputs to avoid risk of damage to the equipment.** ***L'alimentation contrôle peut être 110 ã 230 Vca, appliquée aux bornes N et L, ou 24 Vcc, appliquée aux bornes d'entrée de 0 Vcc, 24 V. Afin d'éviter d'endommager l'équipement, la tension appropriée selon les indications ne doit être appliquée qu'à une entrée d'alimentation.***
#4	**See Section** ***Référer au la Manuel de Programmation Synergy MAN-SGY-001 pour des paramètres par défaut d'usine***

2. Electrical Installation (continued)

Electrical Wiring

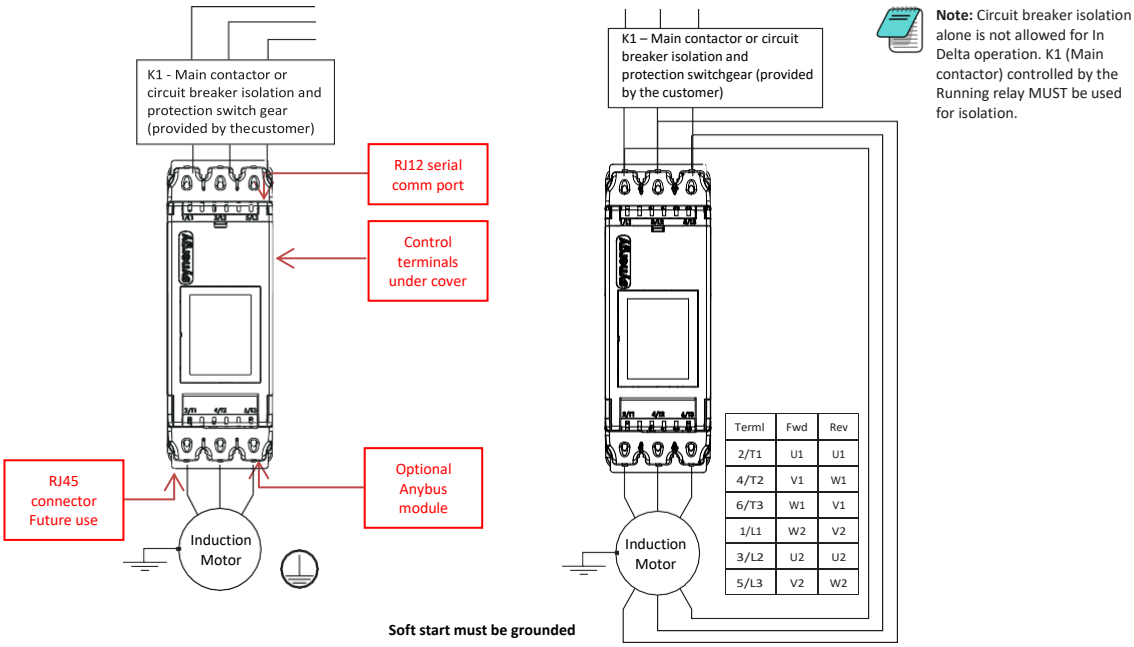

For suitable short circuit protection devices (SCPD's) see Short Circuit Protection in the Technical Information/ Standards section of this guide. *Pour un dispositif de protection approprié contre le court-circuit, voir la protection contre le court-circuit dans la section « Informations techniques/normes » du présent guide.*	For wire size and torque requirements see Technical Information/Standards section of this guide. *Pour les dimensions de câble et les besoins en couple, voir la section « Informations techniques/normes » du présent guide.*	**In Delta** For this configuration applying the equation. VMX-synergy™ Ie = Ie Motor/√3 Allows lower current rating VMX-synergy™ than the motor. When In Delta configuration is used a line contactor controlled by VMX-synergy™ **MUST** be used with the In Delta Firing Mode selected in the advanced menu.	***En Delta*** *Pour cette configuration,appliquer l'équation. suivante: VMX-synergy™ Ie = Ie (moteur)/√3* *Cela permet le courant nominal inférieur de VMX-synergy™ par rapport au moteur.* *Lorsque En Delta configuration est utilisée,* **IL FAUT** *utiliser un sectionneur principal contrôlé par VMX-synergy™, En Delta mode de fonctionnement, sélectionné dans le menu avancé.*

2. Electrical Installation (continued)

Control Wiring

1) *The programmed digital input settings for D1COM, D1-1I, D1-2I, and D2COM, D2-1I must correspond to the voltage applied to these terminals to avoid risk of damage to the equipment.*

2) *The control supply can be 110 to 230Vac applied to the N, L terminals or 24Vdc applied to the 0Vdc, 24V input terminals. The correct voltage as specified must only be applied to one of these supply inputs to avoid risk of damage to the equipment.*

Three Wire Control

3 Wire Control Diagram
110/230Vac control supply (U_s)
and digital input (U_c) programming.

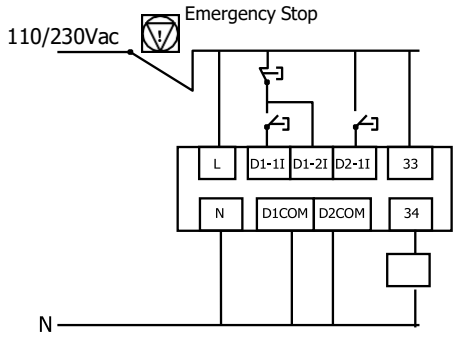

3 Wire Control Diagram 24Vdc control supply (U_s) and digital input (U_c) programming (only applicable to VMX-SGY-101 to VMX-SGY-305)

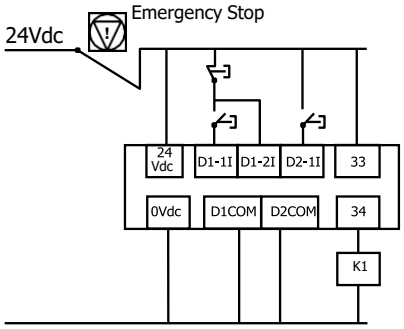

Power factor correction capacitors must not be positioned between the soft starter and the motor, or there is a risk of damaging the thyristors due to current peaks.*

User Programmable Control

110/230Vac (U_s) and user (U_c)
Programmable control diagram

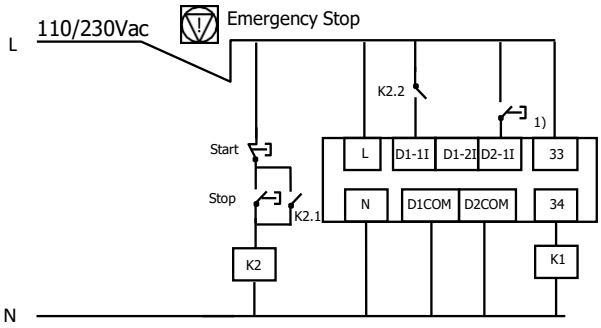

24Vdc (U_s) and user (U_c)
Programmable control diagram
Only applicable for VMX-SGY-101 to VMX-SGY-305

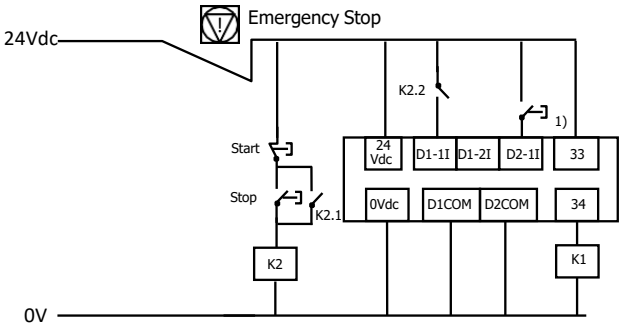

Digital Input Configuration	Digital Output Configuration
D1-1I = High Start/Low Stop	34 = Digital Output 3 set to "Running" (This pulls in the line contactor, K1, before the ramp starts)
D1-2I = None	
D2-1I = High Reset	

1) Optional high reset. If this reset is required, ensure that "User Programmable" is selected as the control method menu found in the Digital Inputs menu. If you would prefer the reset to work by removing and reapplying the Start Signal on D1-1I, then select "Two wire control" in the control method menu.

2. Electrical Installation (continued)

Reversing Configuration

Soft start reversing circuit without soft stop, it shows the main components required. You must follow your local wiring and electrical regulations when constructing this circuit, set to 'User Programmable' control.

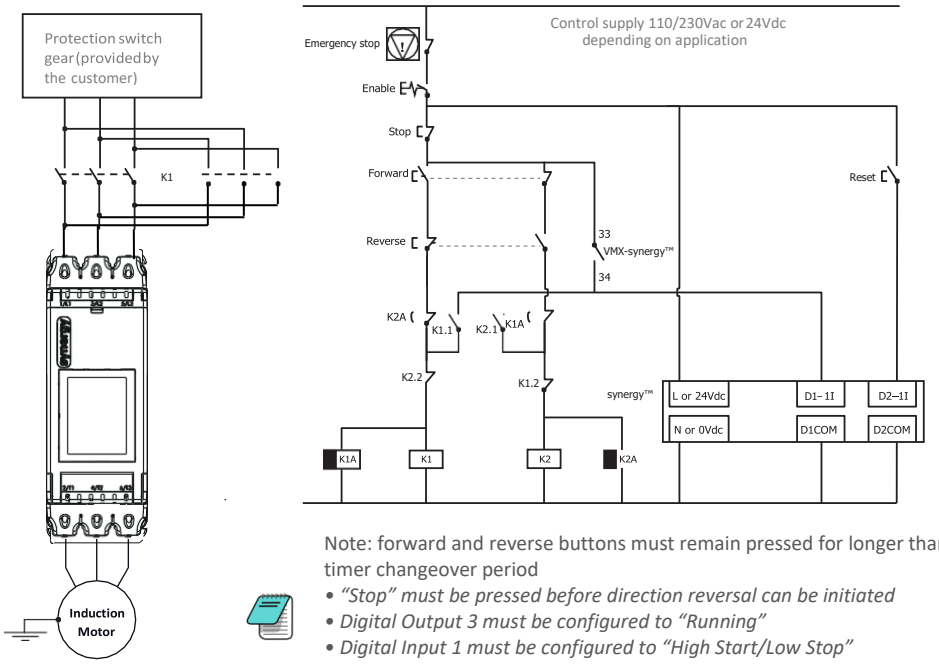

Note: forward and reverse buttons must remain pressed for longer than timer changeover period

- *"Stop" must be pressed before direction reversal can be initiated*
- *Digital Output 3 must be configured to "Running"*
- *Digital Input 1 must be configured to "High Start/Low Stop"*
- *Digital Input 2 must be configured to "Reset"*

Item	Description
K1, K2	AC3 rated forward/reverse
K1A, K2A	1 second drop out delay timers
VMX-synergy™	VMX-synergy™ soft start

These are the major components of the system. Local wiring regulations should be observed. Note the use of timers to ensure that a reversed voltage is not applied to the starter/motor before the motor field has had some chance to die away.

The thermal capabilities of VMX-synergy™ should be considered.

2. Electrical Installation (continued)

Sequential Soft Start Configuration

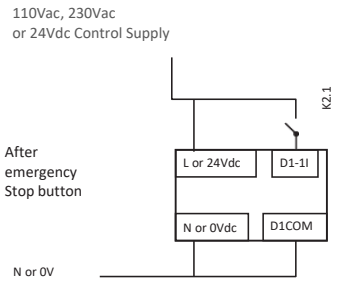

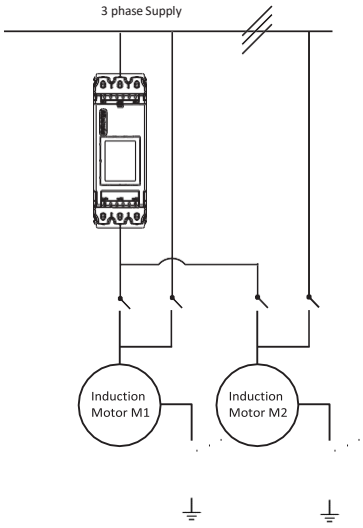

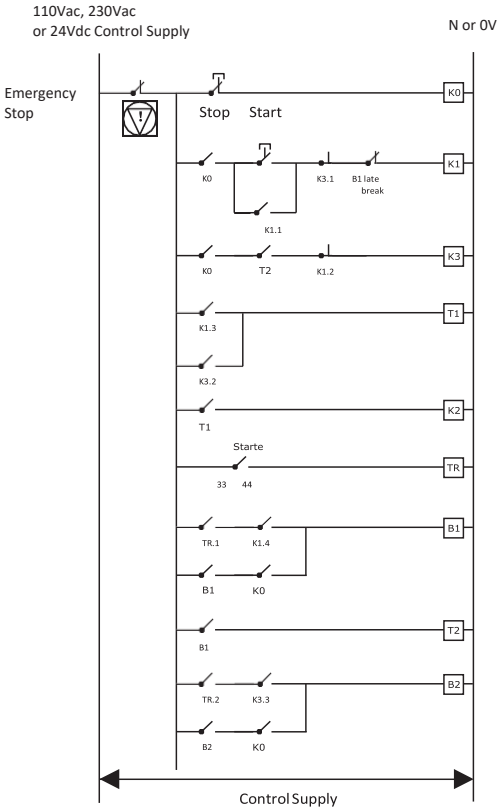

Notes:

Soft Starter must have stop time set to 0. T1 Time between K1 or K3 closing and the starter being energised - 0.5 sec minimum. T2 Time between B1 closing and K3 closing.

-Dependant on application - 0.5 sec minimum.

Set to 'Two wire control'.

Emergency stop switch cuts off control supply and drops out starter and motors. Stop switch drops control supply from contactors and timers stopping both motors.

Start switch initiates soft start then bypass of motor 1 immediately followed by soft start then bypass of motor 2.

Soft Starter must be rated for combined starting duty.

The control logic can be continued for more motors.

The thermal capabilities of VMX-synergy™ should be considered.

Blank Page

3. Configuration and Parameters

Status LED

The Motortronics UK logo LED on the VMX-synergy™ front panel will blink once every 10 seconds to provide visual confirmation that all microprocessors in the soft starter are operating properly.

Configuration Overview

Configuring VMX-synergy™ soft starters is as simple as setting the parameters to match your motor, application, power source, control scheme, etc.

You can configure synergy from its touchscreen, from an optional remote touchscreen, or from a PLC using Modbus RTU via the onboard RJ12 connector.

Auto Setup Procedure

Allow the user to change all of the parameters at once to settings that are typical for general applications. One or more parameters as can be adjusted to fine tune the settings for your specific application.

Setup by Individual Parameter Settings

Allows the user to change the parameter settings one at a time. The individual parameters are grouped by categories as on the touchscreen.

Configuration from Touchscreen

Use the the on-screen buttons to enter data or to scroll through setup menus, using the “Up,” Dn,” “BACK,” and “NEXT” buttons as necessary. From the home “Menu” screen, select either “Auto Setup” or “Advanced.”

Auto Setup

On initial power up, VMX-synergy™ will show a ‘Setup Wizard’ menu – Auto and Advanced. To jump immediately to the pre-defined parameter sets, press the Auto button and follow the on-screen prompts. Refer to the example on the following screen.

To automatically set up parameters on subsequent start-up, select the ‘Home’ menu from the status screen and select ‘Auto Setup’. Follow the on-screen prompts. Refer to the example on the following screen.

Individual Parameter Setup

From the Setup Wizard or Home menu, select the ‘Advanced’ menu. Set the required parameters from the displayed menus. See Section 3.8 for detailed descriptions of the available parameters.

3. Configuration and Parameters (continued)

On Screen Menus

Initial Screen

Displayed on FIRST switch-on ONLY.

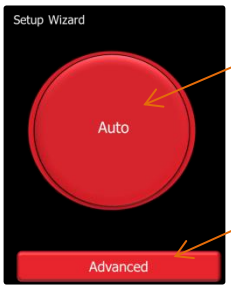

Auto Setup wizard.
See Section 3.5

Advanced menu
See Section 3.8

Status Screen

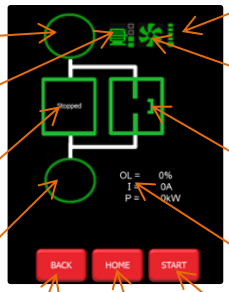

Supply Status
Turns RED if unit has tripped on supply failure

Motor Overload Status
Turns RED if unit has tripped on overload

Status Messages

Motor Side Status
Turns RED if unit has tripped on motor side phase loss

Returns to previous screen/menu

Enters Sub-Menus

Temperature Status
Turns RED if unit has tripped on over temperature

Cooling Fan Status
Turns RED if unit has tripped on fan failure

Internal Bypass Status (open/closed)

Displays Overload Percentage, Instantaneous running Current and power

Start/Stop Motor
Only active if Local Control Enabled

'Home' Menus

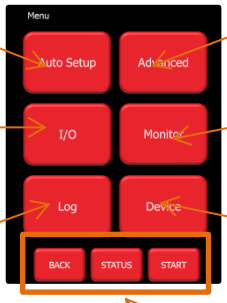

Auto-Setup Menu
See Sections: 3.5, 3.6, 3.8

Input/Output Menus
See Section:

Logging Menus
See Section: 3.12

Advanced Menus
See Section:

Monitor Screens
See Section:

Device Menus
See Section:

See 'Status Screen'

3. Configuration and Parameters (continued)

Auto-Setup Example

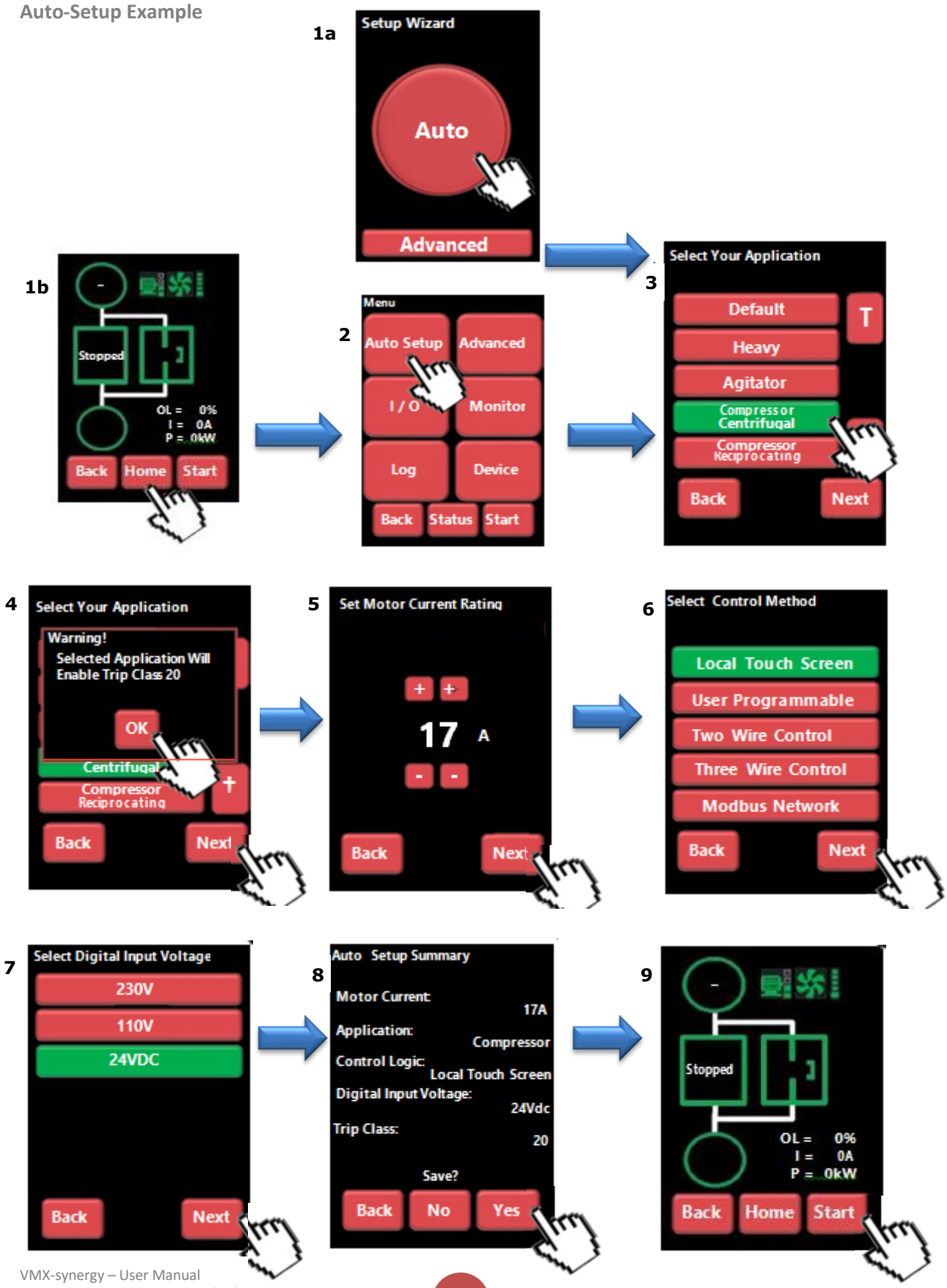

3. Configuration and Parameters (continued)

Auto-Setup Parameter Settings

AutoSetupParameter Settings																						
#	Application	Start pedestal	Stop pedestal	Start time	Soft stop time	Trip Class	Current limit level	Current limit time	Optimize rate	Auto pedestal	Auto End Start 2	Auto End Start 1	Auto End 3	Delta Operation	Auto stop	Soft stop smoothing	spare	Auto ramp	Auto end stop	Auto Impact load	Current limit - stopping	Current limit time - stopping
–	Unit	%	%	s	s	–	FL	s	–	En	En	E	E	En	En	En	E	E	En	En	FL	s
0	Default	20	10	10	0	10	3.5	30	5	0	0	0	1	1	0	0	0	0	0	0	8	2
1	Heavy	40	10	10	0	20	4	40	5	1	0	1	1	1	0	0	0	0	0	0	8	2
2	Agitator	30	10	10	0	10	3.5	25	5	1	0	1	1	1	0	0	0	0	0	0	8	2
3	Compressor - Centrifugal	35	10	15	0	20	3.5	25	5	1	0	1	1	1	0	0	0	0	0	0	8	2
4	Compressor - Reciprocating	45	10	15	0	20	3.5	25	15	1	0	1	1	1	0	0	0	0	0	0	8	2
5	Compressor - Screw	40	10	15	0	20	3.5	25	5	1	0	1	1	1	0	0	0	0	0	0	8	2
6	Compressor - Vane	35	10	7	0	10	3.5	25	5	1	0	1	0	1	0	0	0	0	0	0	8	2
7	Compressor - Scroll	35	10	7	0	10	3.5	25	15	1	0	1	0	1	0	0	0	0	0	0	8	2
8	Ball mill	40	10	10	0	20	5.5	25	5	1	0	1	0	1	0	0	0	0	0	0	8	2
9	Centrifuge	40	10	10	0	30	2.5	300	5	1	0	1	0	1	0	0	0	0	0	0	8	2
10	Bow Thruster - Zero Pitch	10	10	10	0	10	2.5	25	5	1	1	0	1	1	0	0	0	0	0	0	8	2
11	Bow Thruster - Loaded	10	10	10	0	20	4	25	5	1	1	0	1	1	0	0	1	0	0	0	8	2
12	Conveyor - Unloaded	10	10	10	7	10	3.5	30	5	1	0	1	0	1	1	1	1	0	1	0	2	10
13	Conveyor - Loaded	10	10	10	7	20	5.5	30	5	1	0	1	0	1	1	1	0	0	1	0	2	10
14	Crusher	40	10	10	0	30	3.5	60	5	1	0	1	0	1	0	0	0	0	0	0	8	2
15	Fan - Low Inertia	30	10	15	0	10	3.5	30	5	1	0	1	0	1	0	1	0	0	0	0	8	2
16	Fan - High Inertia	40	10	10	0	30	3.5	60	5	1	0	1	0	1	0	0	0	0	0	0	8	2
17	Feeder - screw	20	10	10	0	10	3.5	25	5	1	0	1	0	1	0	0	0	0	0	0	8	2
18	Grinder	40	10	10	0	20	3.5	40	5	1	0	1	0	1	0	0	0	0	0	0	8	2
19	Hammer mill	40	10	10	0	20	3.5	40	5	1	0	1	0	1	0	0	0	0	0	0	8	2
20	Lathe machines	10	10	15	0	10	3.5	25	5	1	0	1	0	1	0	0	0	0	0	0	8	2
21	Mills - flour Etc	40	10	10	0	20	3.5	40	5	1	0	1	0	1	0	0	0	0	0	0	8	2
22	Mixer - Unloaded	10	10	10	0	10	3.5	25	5	1	0	1	0	1	0	0	0	0	0	0	8	2
23	Mixer - Loaded	10	10	10	0	20	4	25	5	1	0	1	0	1	0	0	0	0	0	0	8	2
24	Moulding Machine	10	10	10	0	10	4.5	25	5	1	0	1	0	1	0	0	0	0	0	1	8	2
25	Pelletisers	40	10	10	0	20	5.5	25	5	1	0	1	0	1	0	0	0	0	0	0	8	2
26	Plastic and textile machines	10	10	10	0	10	4.5	25	5	1	0	1	0	1	0	0	1	0	0	1	8	2
27	Press, flywheel	40	10	10	0	20	3.5	40	5	1	0	1	0	1	0	0	1	0	0	1	8	2
28	Pump - Submersible Centrifugal	10	10	10	60	10	3.5	25	5	1	0	0	0	1	1	1	1	0	1	0	2	25
29	Pump - Submersible Rotodynamic	10	10	10	60	10	3.5	25	5	1	0	0	0	1	1	1	1	0	1	0	2	25
30	Pump - Positive displacement Reciprocating	10	10	10	60	20	3.5	25	15	1	0	0	0	1	1	1	0	0	1	0	2	25
31	Pump - Positive displacement Rotary	10	10	10	60	20	3.5	25	15	1	0	0	0	1	1	1	0	0	1	0	2	25

continued on next page

3. Configuration and Parameters (continued)

Auto Setup Parameter Settings (continued)																						
#	Application	Start pedestal	Stop pedestal	Start time	Soft stop time	Trip Class	Current limit level	Current limit time	Optimize rate	Auto pedestal	Auto End Start 2	Auto End Start 1	Auto End 3	Delta Operation	Auto stop	Soft stop smoothing	spare	Auto ramp	Auto end stop	Impact load	Current limit - stopping	Current limit time - stopping
	Unit	%	%	s	s	–	FL	s	–	En	En	E	E	En	En	En	E	E	En	En	FL	s
32	Pump Jack	40	10	10	0	20	3.5	40	5	1	0	1	0	1	0	0	0	0	0	1	8	2
33	Rolling mill	40	10	10	0	20	3.5	40	5	1	0	1	0	1	0	0	0	0	0	0	8	2
34	Roots Blower	30	10	10	0	20	4.5	25	5	1	0	1	0	1	0	0	0	0	0	0	8	2
35	Saw - Band	10	10	10	0	10	3.5	25	5	1	0	1	0	1	0	0	0	0	0	0	8	2
36	Saw - Circular	40	10	10	0	20	3.5	40	5	1	0	1	0	1	0	0	0	0	0	0	8	2
37	Screen - vibrating	40	10	10	0	20	4.5	40	5	1	0	1	0	1	0	0	0	0	0	0	8	2
38	Shredder	40	10	10	0	30	3.5	60	5	1	0	1	0	1	0	0	0	0	0	0	8	2
39	Transformers, voltage regulators	10	10	5	0	10	3.5	25	5	0	0	0	0	1	0	0	0	0	0	0	8	2
40	Tumblers	20	10	10	0	20	4	25	5	1	0	1	0	0	0	0	0	0	0	0	8	2
41	Wood chipper	40	10	10	0	30	3.5	60	5	1	0	1	0	0	0	0	0	0	0	0	8	2

3. Configuration and Parameters (continued)

Auto Reset Function

The Auto Reset feature automatically resets a selected number of faults and then attempts a start without user intervention. The time between the resets and the number of reset attempts are both programmable. If the Auto Reset has been successful, the Starter must operate trip free for a set time before the counters are re-initialised. If the number of attempts exceeds the set value, the Auto Reset terminates, and the counters will be re-initialised when a Reset or Stop signal is given by the user.

WARNING:
When Auto Reset is enabled, a tripped motor may restart automatically after the Reset Delay time. This may result in equipment damage or personal injury if the function is used in an unsuitable application. Do not use this function without considering applicable local, national, and international standards, regulations, or industry guidelines.

The Auto-Reset function is accessible from the Advanced Menu (see Auto-Reset section of parameter summaries):

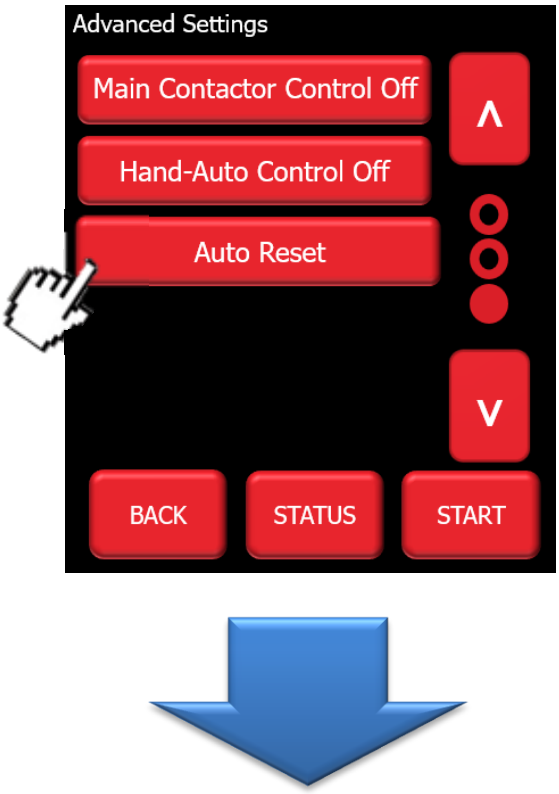

3. Configuration and Parameters (continued)

Auto Reset Function (continued)

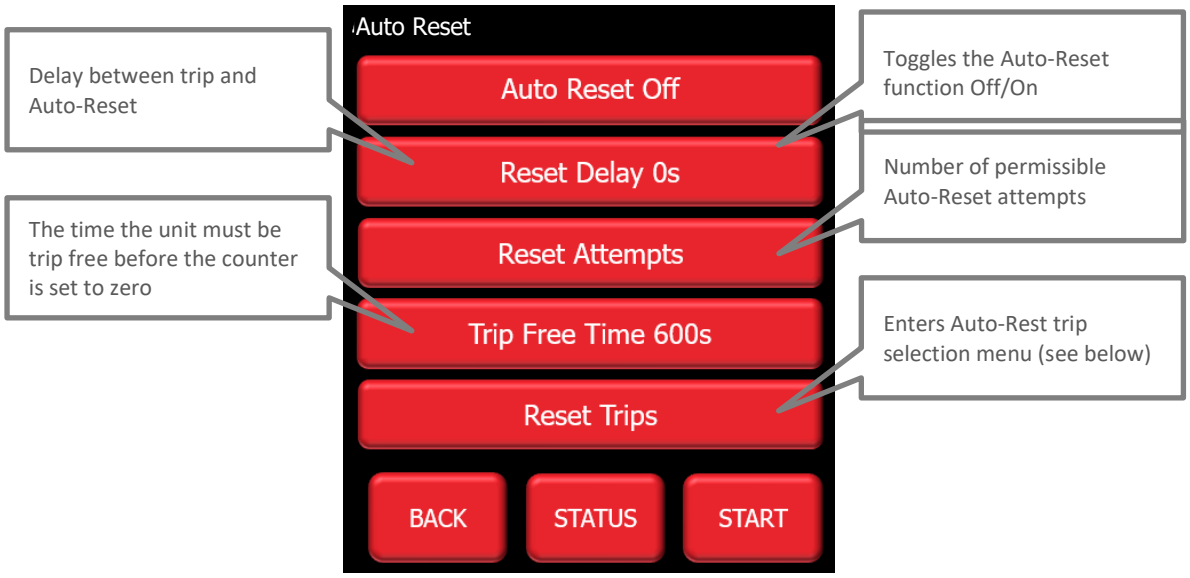

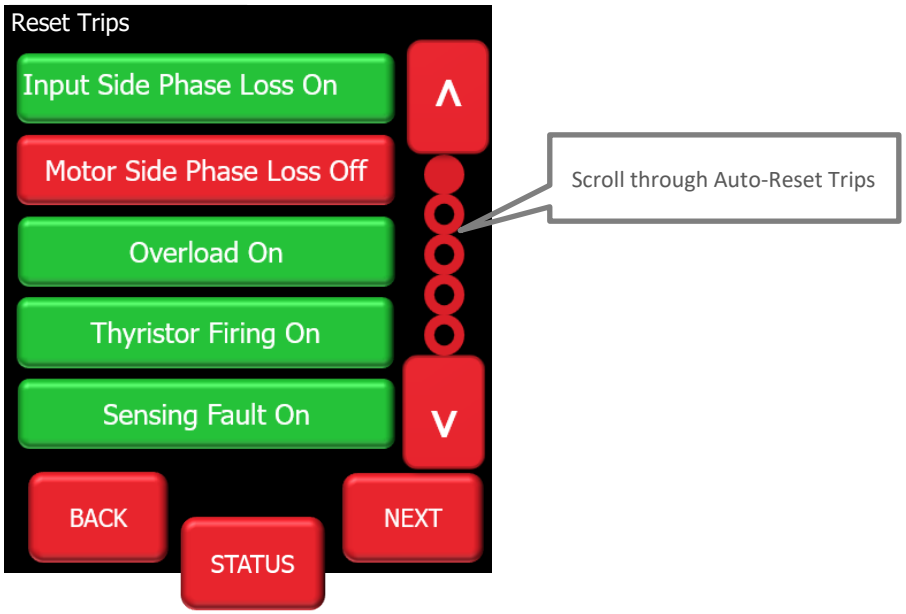

Example page of Reset Trips Sub Menu

3. Configuration and Parameters (continued)

The status of the Auto-Reset function may be observed in the 'Monitor' menu (third page).

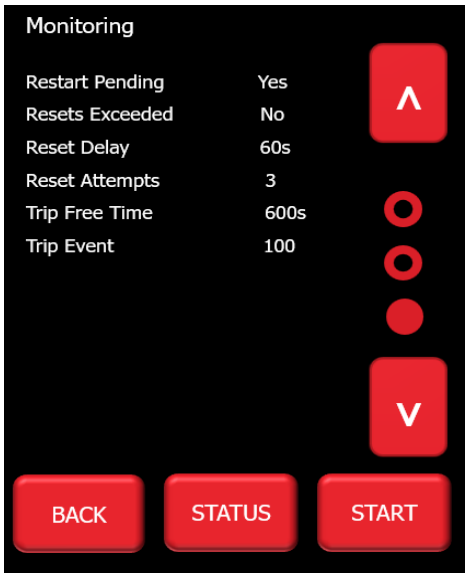

Mapping Auto Reset Status to Digital Outputs

Auto Reset Pending and Auto Reset Exceeded may be mapped to the Digital Outputs (D1 – D4). The selection screen is located in the I/O Menu:

I/O – DIGITAL OUTPUTS – DIGITAL OUTPUT (1 to 4) – SELECT FUNCTION

3. Configuration and Parameters (continued)

Auto Reset Function (continued)

Two-Wire, Three-Wire and Communications control

The Auto reset operates with two-wire, three-Wire and communications start/stop. Generally, this is not a problem if the control supply is maintained, although warning should be given that in 3-wire and communications control the motor may start without a direct start signal. (Although it is implied as no stop had been given during the reset delay period).

Control Supply Loss

When the control supply is removed the microcontroller is unable to make calculations in real time. To overcome this the calculations are made retrospectively when the starter powers up.

Two Wire: Following a control supply loss the Start signal must be retained (Fig 2).

Three Wire: The state of the start signal is saved when the control supply is removed and if it was set to 'start' the Auto Reset will continue at power up. When operating in this mode the motor may start at power up without a start signal being present (Fig 3).

Modbus/Communications

The state of the start signal is saved when the control supply is removed and if it was set to 'start' the Auto Reset will continue at power up. When operating in this mode the motor may start at power up without a start signal being present (Fig 3).

Auto Restart Termination: If the time to re-establish the power exceeds the Reset Delay x Reset Attempts the Auto Reset Terminates.

Overload Trip

Following an overload trip, the overload will at 100% and then cool exponentially to 0% after several minutes.

If a restart is attempted too soon the starter will trip again as the overload would not have cooled to a sufficient level (Fig 5).

It must be ensured the Reset Delay is long enough to allow the overload to cool. This is also the case for the heatsink over temperature trip.

Remote Start on Trip

If Auto Reset is turned on the Remote Start On trip trips are disabled will be ignored.

Hand Auto

If the Hand Auto option is selected the Hand selection will override the Auto Reset.

The Auto Reset will be terminated, and the counters will be re-initialised.

3. Configuration and Parameters (continued)

Fig 1 : Auto Reset - Two Wire -Three Phase Supply Loss

The timing diagrams show the auto reset with a maintained two wire control system
The fault shown is a 3-phase supply loss only, the Control Supply maintained
The 3-Phase power is re-established (after the 2nd attempt) before the Reset Attempts counter is depleted
This assumes the start signal is maintained, if it is removed the Auto Reset terminates
Once power has been re-established there are no further outages and the counters are reset after the trip free time.

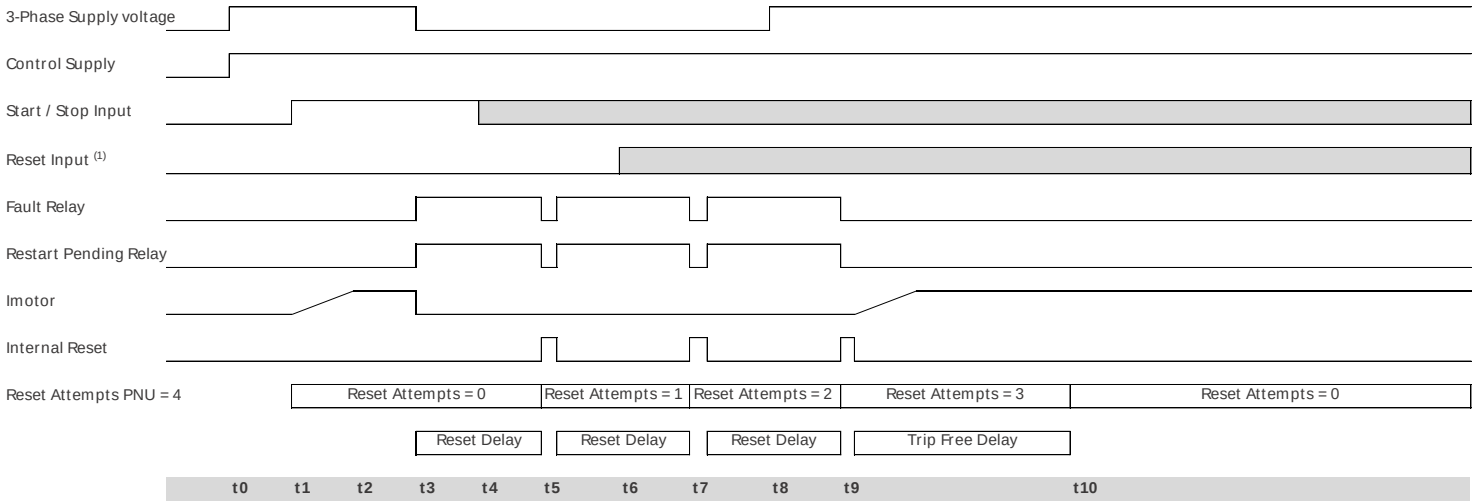

Sequence of events
t0 3 phase supply applied
t1 Start signal applied, motor starts
t2 Motor reaches full voltage
t3 3 phase supply removed
t4 Start signal must still be applied
If it has been removed Auto Reset feature re-initialises
t5 Reset delay = 0 Restart Attempt 1
t6 Rest Signal must be low
If the trip is reset the Auto Reset feature re-initialises
t7 Reset delay = 0 Restart Attempt 2
t8 3-Phase re-established
t9 Reset delay = 0 Restart Attempt 3
t10 Trip Free Delay = 0 Restart Attempt = 0

User Parameters (R/W)

PNU	Range	Default
Auto Reset	On/Off	Off
Reset Delay	0-7200s	0s
Reset Attempts	0-10	0
Reset Trips	All resettable trips	-
Trip Free Time	120-7200	600s

Monitor Parameters (R/O)

PNU	Range
Reset Attempts Remaining	10-0
Reset Delay Remaining	7200s-0s
Restart Pending	1-0
Trip Free Time Remaining	7200s-0s

Notes

For Two Wire control reset occurs automatically when the start signal changes state from low to high, reset shown is programmable reset input (1)

3. Configuration and Parameters (continued)

Fig 2 : Auto Reset - Two Wire - Control Supply Loss

The timing diagrams show the auto reset with a maintained two wire control system
The fault shown is a 3-phase supply loss **and** Control supply loss
The 3-Phase power and control supply are re-established (after the 2nd attempt) before the Reset Attempts counter is depleted
This assumes the start signal is maintained, if it is removed the Auto Reset terminates
Once power has been re-established there are no further outages and the counters are reset after the trip free time.

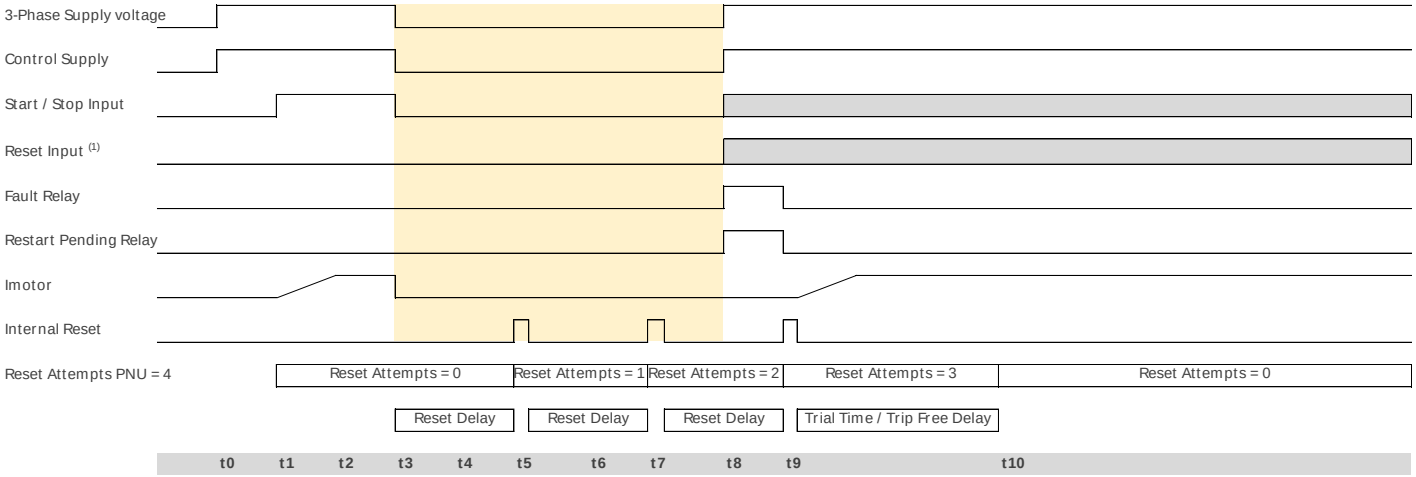

Sequence of events
t0 3 phase supply applied
t1 Start signal applied, motor starts
t2 Motor reaches full voltage
t3 3 phase supply removed
t5 Reset delay = 0 Restart Attempt 1
t7 Reset delay = 0 Restart Attempt 2
t8 3-Phase re-established
Start signal must still be applied
If it has been removed Auto Reset feature re-initialises
If the trip is reset the Auto Reset feature re-initialises
t9 Reset delay = 0 Restart Attempt 3
t10 Trip Free Delay = 0 Restart Attempt = 0

User Parameters (R/W)

PNU	Range	Default
Auto Reset	On/Off	Off
Reset Delay	0-7200s	0s
Reset Attempts	0-10	0
Reset Trips	All resettable trip	-
Trip Free Time	120-7200	600s

Monitor Parameters (R/O)

PNU	Range
Reset Attempts Remaining	10-0
Reset Delay Remaining	7200s-0s
Restart Pending	1-0
Trip Free Time Remaining	7200s-0s

Notes

The Starter is powered down between t3 and t8 (yellow shaded region)
During this time controller is unable to make the calculations in real time
To overcome this the calculations are made retrospectively at time t8
The Start Signal must be maintained, if it is not the Auto Restart will be terminated
For Two Wire control reset occurs automatically when the start signal changes state from low to high, reset shown is programmable reset input (1). If the time to re-establish the power exceeds (Reset Delay x Reset Attempts) to Auto Reset terminates

3. Configuration and Parameters (continued)

Fig 3 : Auto Reset - Three Wire - Three Phase Supply Loss

The timing diagrams show the auto reset with Three wire / Modbus control
The fault shown is a 3-phase supply loss only, the Control Supply maintained
The 3-Phase power is re-established (after the 2nd attempt) before the Reset Attempts counter is depleted
This assumes the momentary stop signal is not activated, if it is the Auto Reset terminates
Once power has been re-established there are no further outages and the counters are reset after the trip free time.

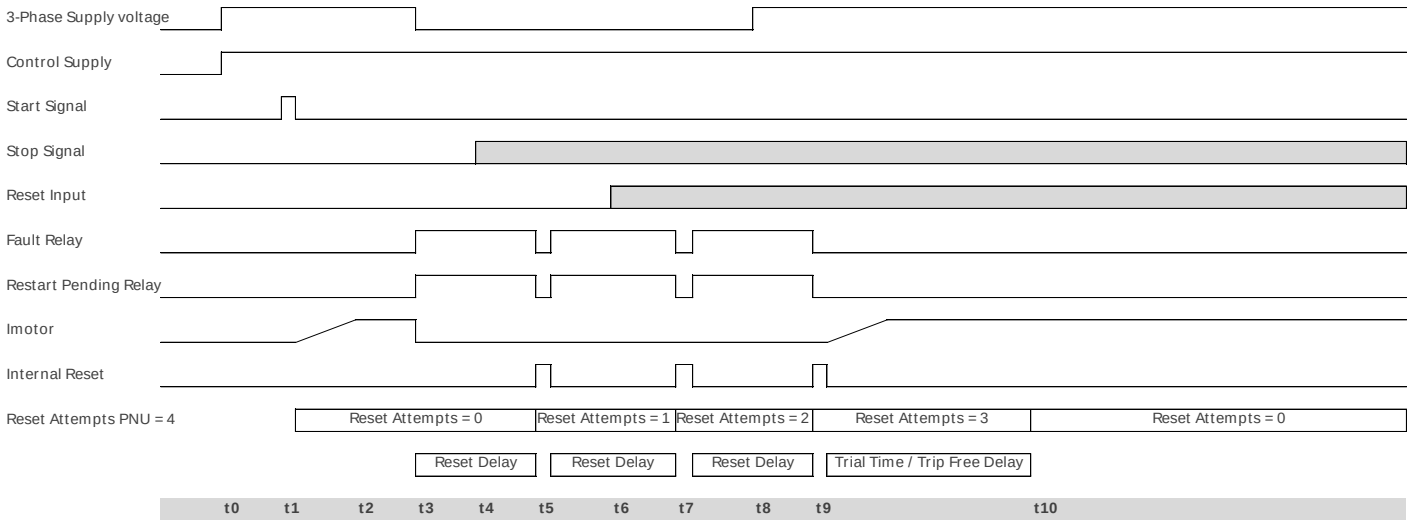

Sequence of events

t0 3 phase supply applied
t1 Start signal applied, motor starts
t2 Motor reaches full voltage
t3 3 phase supply removed
t4 Start signal must still be applied
If it has been removed Auto Reset feature re-initialises
t5 Reset delay = 0 Restart Attempt 1
t6 Rest Signal must be low
If the trip is reset the Auto Reset feature re-initialises
t7 Reset delay = 0 Restart Attempt 2
t8 3-Phase re-established
t9 Reset delay = 0 Restart Attempt 3
t10 Trip Free Delay = 0 Restart Attempt = 0

User Parameters (R/W)

PNU	Range	Default
Auto Reset	On/Off	Off
Reset Delay	0-7200s	0s
Reset Attempts	0-10	0
Reset Trips	All resettable trip	-
Trip Free Time	120-7200	600s

Monitor Parameters (R/O)

PNU	Range
Reset Attempts Remaining	10-0
Reset Delay Remaining	7200s-0s
Restart Pending	1-0
Trip Free Time Remaining	7200s-0s

Notes

3. Configuration and Parameters (continued)

Fig 4 : Auto Reset - Three Wire - Control Supply Loss

The timing diagrams show the auto reset with Three wire / Modbus control
The fault shown is a 3-phase supply loss **and** Control supply loss
The 3-Phase power and control supply are re-established (after the 2nd attempt) before the Reset Attempts counter is depleted
This assumes the momentary stop signal is not activated, if it is the Auto Reset terminates
Once power has been re-established there are no further outages and the counters are reset after the trip free time.

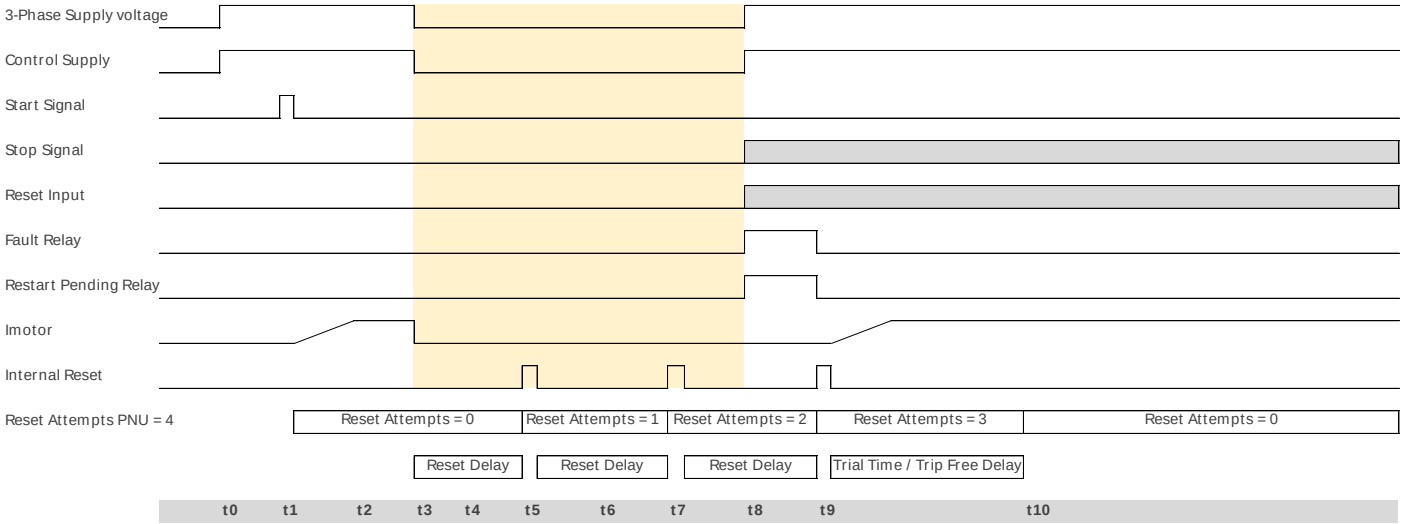

Sequence of events
t0 3 phase supply applied
t1 Start signal applied, motor starts
t2 Motor reaches full voltage
t3 3 phase supply removed
t5 Reset delay = 0 Restart Attempt 1
t7 Reset delay = 0 Restart Attempt 2
t8 3-Phase re-established
Start signal must still be applied
If it has been removed Auto Reset feature re-initialises
Rest Signal must be low
If the trip is reset the Auto Reset feature re-initialises
t9 Reset delay = 0 Restart Attempt 3
t10 Trip Free Delay = 0 Restart Attempt = 0

User Parameters (R/W)

PNU	Range	Default
Auto Reset	On/Off	Off
Reset Delay	0-7200s	0s
Reset Attempts	0-10	0
Reset Trips	All resettable trips	-
Trip Free Time	120-7200	600s

Monitor Parameters (R/O)

PNU	Range
Reset Attempts Remaining	10-0
Reset Delay Remaining	7200s-0s
Restart Pending	1-0
Trip Free Time Remaining	7200s-0s

Notes
The controller is powered down between t3 and t8 (yellow shaded region)
During this time controller is unable to make the calculations in real time
To overcome this the calculations are made retrospectively at time t8
Start signal state saved at power down and loaded at power up. **This means it will start without a start signal being present**
If the time to re-establish the power exceeds (Reset Delay x Reset Attempts) to Auto Reset terminates

3. Configuration and Parameters (continued)

Fig 5 : Auto Reset - Two Wire - Overload

The timing diagrams show the auto reset with a maintained two wire control system
The fault shown is an overload trip, the Control Supply maintained
In this instance the Auto Reset clears the trip but the overload (%) will take a certain amount of time to decay
If insufficient time is left before re-starts the overload will trip again repeatably until the Reset Attempts count exceeds it set value.
This must be considered and enough time left to allow the overload to decay to a low level

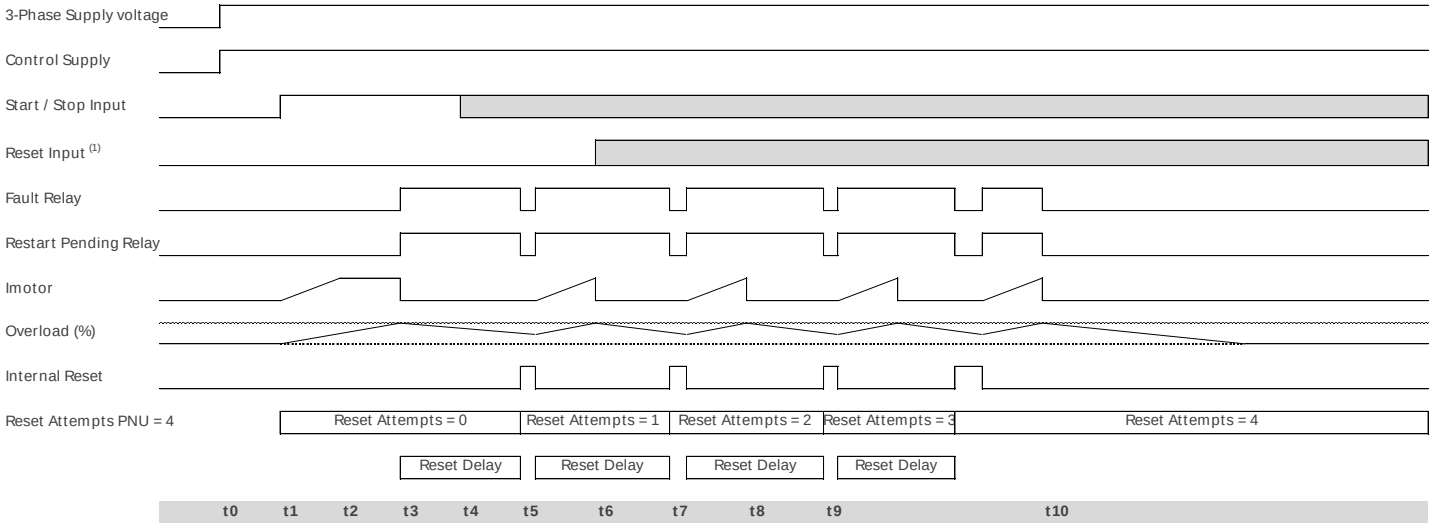

Sequence of events	
t0	3 phase supply applied
t1	Start signal applied, motor starts
t2	Motor reaches full voltage
t3	3 phase supply removed
t4	Start signal must still be applied
	If it has been removed Auto Reset feature re-initialises
t5	Reset delay = 0 Restart Attempt 1
t6	Rest Signal must be low
	If the trip is reset the Auto Reset feature re-initialises
t7	Reset delay = 0 Restart Attempt 2
t8	3-Phase re-established
t9	Reset delay = 0 Restart Attempt 3
t10	Trip Free Delay = 0 Restart Attempt = 0

User Parameters (R/W)

PNU	Range	Default
Auto Reset	On/Off	Off
Reset Delay	0-7200s	0s
Reset Attempts	0-10	0
Reset Trips	All resettable trips	-
Trip Free Time	120-7200	600s

Monitor Parameters (R/O)

PNU	Range
Reset Attempts Remaining	10-0
Reset Delay Remaining	7200s-0s
Restart Pending	1-0
Trip Free Time Remaining	7200s-0s

Notes

In this instance the starter has failed to Auto Restart in the set number of attempts
The starter will remain in the tripped state until reset
To overcome this the Reset Delay time should be extended to allow the overload to cool
For Two Wire control reset occurs automatically when the start signal changes state from low to high, reset shown is programmable reset input (1)

3. Configuration and Parameters (continued)

Parameter Summary

Summary – Parameters for Touchscreen Setup – "Advanced" Category								
Group	Parameter	Units	Range	Read/ Write	Modbus		Default Setting	User Setting
					Dec	Hex		
Save Parameters		N/A	NO/YES	R/W	62144	F2C0	NO	
Automatic Settings	Automatic Pedestal	N/A	OFF/ON	R/W	19840	4D80	OFF	
	Automatic Ramp	N/A	OFF/ON	R/W	20352	4F80	OFF	
	Automatic End Start (1)	N/A	OFF/ON	R/W	19968	4E00	OFF	
	Automatic Stop	N/A	OFF/ON	R/W	20160	4EC0	OFF	
	Automatic Stop Profile	%	0 to 100	R/W	20608	5080	50	
	Automatic End Stop	N/A	OFF/ON	R/W	20416	4FC0	OFF	
	Automatic Impact Load	N/A	OFF/ON	R/W	20480	5000	OFF	
	Auto Smooth Stop	N/A	OFF/ON	R/W	20224	4F00	OFF	
	Auto Smoothing Level	%	10 to 100	R/W	20672	50C0	50	
	Automatic End Start (2)	N/A	OFF/ON	R/W	19904	4DC0	OFF	
	– Automatic End Start (3)	N/A	OFF/ON	R/W	20032	4E40	OFF	
	– Rate End Start (3)	%	0 to 100	R/W	768	0300	50	
Start Settings	Start Time	s	1 to 300	R/W	7104	1BC0	10	
	Start Pedestal	%	10 to 100	R/W	704	02C0	20	
	Start Current Limit → Start Current Limit Trip	N/A	OFF/ON	R/W	53790	D21E	ON	
	Start Current Limit → Start Current Limit Level	A	100% mtr FLA to 450% VMX-synergy™ rated A	R/W	26880	6900	350% mtr FLA	
	Start Current Limit → Start Current Limit Time	s	1 to 300	R/W	26944	6940	30	
	Kick Start → Kick Start	N/A	OFF/ON	R/W	320	0140	OFF	
	Kick Start → Kick Start Time	ms	10 to 2,000	R/W	7040	1B80	100	
	Kick Start → Kick Start Pedestal	%	30 to 80	R/W	640	0280	75	
	Contactor Delay	ms	20 to 800	R/W	8320	2080	160	
Stop Settings	Stop Time	s	0 to 300	R/W	7296	1C80	0	
	Stop Pedestal	%	10 to 40	R/W	896	0380	10	
	Stop Current Limit → Stop Current Limit Trip	N/A	OFF/ON	R/W	53791	D21F	OFF	
	Stop Current Limit → Stop Current Limit Level	A	100% mtr FLA to 450% VMX-synergy™ rated A	R/W	28800	7080	350% mtr FLA	
	Stop Current Limit → Stop Current Limit Time	s	1 to 300	R/W	28864	70C0	10	

3. Configuration and Parameters (continued)

Summary – Parameters for Touchscreen Setup – "Advanced" Category (continued)									
–	Group	Parameter	Units	Range	Read/ Write	Modbus		Default Setting	User Setting
						Dec	Hex		
	Motor Protection	Motor Current	A	50% to 100% of VMX-synergy™ rated A	R/W	25728	6480	100%	
		Trip Class	class	10, 20, 30	R/W	25664	6440	10	
		Low Current Settings → Low Current Trip	N/A	OFF/ON	R/W	53787	D21B	OFF	
		Low Current Settings → Low Current Trip Level	A	25% to 100% of motor FLA	R/W	26304	66C0	25%	
		Low Current Settings → Low Current Trip Time	ms	100 to 9,000	R/W	26368	6700	100	
		Shearpin Settings → Shearpin Trip	N/A	OFF/ON	R/W	53793	D221	ON	
		Shearpin Settings → Shearpin Trip Current	A	100% mtr FLA to 450% VMX-synergy™ rated A	R/W	27584	6BC0	450% VMX-synergy ™ A	
		Shearpin Settings → Shearpin Trip Time	ms	100 to 9,000	R/W	27648	6C00	100	
		Overload Settings → Overload Trip	N/A	OFF/ON	R/W	53792	D220	ON	
		Overload Settings → Overload Level	A	50% to 125% of motor FLA	R/W	28224	6E40	115%	
	iERS	iERS	N/A	OFF/ON	R/W	21120	5280	ON	
		Dwell Time	s	1 to 300	R/W	7360	1CC0	5	
		iERS Rate	%	0 to 100	R/W	21184	52C0	25	
		iERS Level	%	0 to 100	R/W	21376	5380	100	
		Fixed Voltage (Level)	V	100 to 500	R/W	35200	8980	500	
		Fixed Voltage	N/A	OFF/ON	R/W	35264	89C0	OFF	
	Control	Control Method	–	Local Touch Screen User Programmable Two Wire Control Three Wire Control Modbus Network	R/W	59392	E800	Local Touch Screen	

3. Configuration and Parameters (continued)

Summary – Parameters for Touchscreen Setup – "Advanced" Category (continued)									
–	Group	Parameter	Units	Range	Read/ Write	Modbus		Default Setting	User Setting
						Dec	Hex		
	Trip Settings	Trip Sensitivity	%	0 to 100	R/W	44864	AF40	0	
		Cover Open Trip	N/A	OFF/ON	R/W	53803	D22B	OFF	
		Shearpin Trip	N/A	OFF/ON	R/W	53793	D221	ON	
		Overload Trip	N/A	OFF/ON	R/W	53792	D220	ON	
		Low Current Trip	N/A	OFF/ON	R/W	53787	D21B	OFF	
		Start Current Limit Trip	N/A	OFF/ON	R/W	53790	D21E	ON	
		Stop Current Limit Trip	N/A	OFF/ON	R/W	53791	D21F	OFF	
		PTC Motor Thermistor Trip	N/A	OFF/ON	R/W	53794	D222	OFF	
		L1-L2-L3 Trip	N/A	OFF/ON	R/W	53808	D230	OFF	
		L1-L3-L2 Trip	N/A	OFF/ON	R/W	53807	D22F	OFF	
		Remote Start Trip	N/A	OFF/ON	R/W	53804	D22C	ON	
		Current Sensor Trip	N/A	OFF/ON	R/W	5377	D20F	OFF	
		Fan Trip	N/A	OFF/ON	R/W	53782	D216	ON	
		Communications Trip	N/A	OFF/ON	R/W	53796	D224	ON	
		Shut Down (1)	N/A	OFF/ON	R/W	53769	D209	ON	
		Shut Down (2)	N/A	OFF/ON	R/W	53770	D20A	ON	
		Thyristor Firing Trip	N/A	OFF/ON	R/W	53774	D20E	ON	
		Motor Side Phase Loss	N/A	OFF/ON	R/W	53777	D211	ON	
		Sensing Fault Trip	N/A	OFF/ON	R/W	53781	D215	ON	
		Thermal Sensor Trip	N/A	OFF/ON	R/W	53768	D208	ON	
		External Trip Enable	N/A	OFF/ON	R/W	53795	D223	OFF	
		Main Board Trip	N/A	OFF/ON	R/W	53800	D228	ON	
		Keypad Trip	N/A	OFF/ON	R/W	53798	D226	OFF	
		Logging Trip	N/A	OFF/ON	R/W	53799	D227	OFF	
		Input Side Phase Loss	N/A	OFF/ON	R/W	53762	D202	ON	
		Firing Mode	N/A	OFF/ON	R/W	128	80	In-line	
		Legacy Delta Mode	N/A	OFF/ON	R/W	192	C0	OFF	
		Main Contactor Control	N/A	OFF/ON	R/W	14144	3740	OFF	
		Hand/Auto Control	N/A	OFF/ON	R/W	28160	6E00	OFF	

3. Configuration and Parameters (continued)

Summary – Parameters for Touchscreen Setup – "Advanced" Category (continued)									
–	Group	Parameter	Units	Range	Read/ Write	Modbus		Default Setting	User Setting
						Dec	Hex		
	Auto Reset	Auto Reset	N/A	OFF/ON	R/W	20736	5100	Off	
		Reset Delay	s	0 to 7200	R/W	20737	5101	0	
		Reset Attempts	N/A	0 to 10	R/W	14144	3740	0	
		Trip Free Time	s	0 to 7200	R/W	20736	5100	600	
		Input side Phase Loss	N/A	OFF/ON	R/W	20800	5140	ON	
		Thermal	N/A	OFF/ON	R/W	20801	5141	ON	
		Thyristor Firing	N/A	OFF/ON	R/W	20802	5142	ON	
		Motor Side Phase Loss	N/A	OFF/ON	R/W	20803	5143	ON	
		Control Voltage Low	N/A	OFF/ON	R/W	20805	5145	ON	
		Sensing Fault	N/A	OFF/ON	R/W	20806	5146	ON	
		Fan	N/A	OFF/ON	R/W	20809	5149	ON	
		Low Current	N/A	OFF/ON	R/W	20810	514A	ON	
		Current Limit time Out	N/A	OFF/ON	R/W	20811	514B	ON	
		Overload	N/A	OFF/ON	R/W	20812	514C	ON	
		Shearpin	N/A	OFF/ON	R/W	20813	514D	ON	
		PTC Thermistor	N/A	OFF/ON	R/W	20814	514E	ON	
		External	N/A	OFF/ON	R/W	20815	514F	ON	
		Communications	N/A	OFF/ON	R/W	20813	5150	ON	
		Bypass	N/A	OFF/ON	R/W	20817	5151	ON	
		Cover	N/A	OFF/ON	R/W	20818	5152	OFF	
		Phase Rotation	N/A	OFF/ON	R/W	20820	5154	OFF	
		Operation 4	N/A	OFF/ON	R/W	20821	5155	ON	
		Current Sensor	N/A	OFF/ON	R/W	20822	5156	ON	
		Operation 3	N/A	OFF/ON	R/W	20823	5157	ON	
		Operation 1	N/A	OFF/ON	R/W	20824	5158	ON	
		Operation 2	N/A	OFF/ON	R/W	20825	5159	ON	
		Operation 5	N/A	OFF/ON	R/W	20826	515A	ON	

3. Configuration and Parameters (continued)

Summary – Parameters for Touchscreen Setup – "I/O" Category								
Group	Parameter	Units	Range	Read/ Write	Modbus		Default Setting	User Setting
					Dec	Hex		
Digital Inputs	Digital Input Voltage	V	230Vac, 110Vac, 24Vdc	R/W	10880	2A80	230Vac	
	Control Method	–	Local Touch Screen User Programmable Two Wire Control Three Wire Control Modbus Network	R/W	59392	E800	Local Touch Screen	
	Digital Input 1 (D1-1I) → Select Function	–	Off Start/Stop Freeze Ramp Reset iERS	R/W	10944	2AC0	Start/ Stop	
	Digital Input 1 (D1-1I) → High Input =1 Sets Value	N/A	OFF/ON	R/W	11264	2C00	ON	
	Digital Input 2 (D1-2I) → Select Function	–	same as DI1 function selections	R/W	10945	2AC1	OFF	
	Digital Input 2 (D1-2I) → High Input =1 Sets Value	N/A	OFF/ON	R/W	11266	2C02	ON	
	Digital Input 3 (D2-1I) → Select Function	–	same as DI1 function selections	R/W	10946	2AC2	Reset	
	Digital Input 3 (D2-1I) → High Input =1 Sets Value	N/A	OFF/ON	R/W	11268	2C04	ON	
Digital Outputs	Digital Output 1 N/C (12) → Select Function	–	Off Ready Enable d Error Runni ng End of Start Current Limit iERS Active Auto Reset Pending Auto Reset Exceeded	R/W	11584	2D40	Error	
	Digital Output 1 N/C (12) → High Output =1 When Value	N/A	OFF/ON	R/W	11904	2E80	ON	
	Digital Output 2 N/O (24) → Select Function	–	same as DO1 function selections	R/W	11585	2D41	Error	
	Digital Output 2 N/O (24) → High Output =1 When Value	N/A	OFF/ON	R/W	11906	2E82	ON	
	Digital Output 3 N/O (34) → Select Function	–	same as DO1 function selections	R/W	11586	2D42	Running	
	Digital Output 3 N/O (34) → High Output =1 When Value	N/A	OFF/ON	R/W	11908	2E84	ON	
	Digital Output 4 N/O (44) → Select Function	–	same as DO1 function selections	R/W	11587	2D43	End Of Start	
	Digital Output 4 N/O (44) → High Output =1 When Value	N/A	OFF/ON	R/W	11910	2E86	ON	
Analog Inputs	Analog Input Type	N/A	0–10V/4–20mA	R/W	9600	2580	0–10V	
	Select Function	–	Off Current Limit Start Current Shearpin Current Overload	R/W	9664	25C0	OFF	
	Scaling Level	–	0 to 16,384	R/W	9728	2600	16,384	

3. Configuration and Parameters (continued)

Parameter Summary for Touchscreen Setup – "I/O" Category (continued)									
–	Group	Parameter	Units	Range	Read/ Write	Modbus		Default Setting	User Setting
						Dec	Hex		
	Analog Outputs	Analog Output Type	N/A	0–10V/4–20mA	R/W	8960	2300	0–10V	
		Select Function	–	Off Current Measured Overload Overload SCR P-Total	R/W	9024	2340	OFF	
		Scaling Level	–	0 to 16,384	R/W	9088	2380	0	
		PTC Motor Thermistor Trip	N/A	OFF/ON	R/W	53794	D222	OFF	

Summary – Parameters for Touchscreen Setup – "Monitor" Category									
	Group	Parameter	Units	Range	Read/ Write	Modbus		Default Setting	User Setting
						Dec	Hex		
	Monitoring	Line Frequency	Hz	45 to 65	Read	32000	7D00	n/a	–
		Phase Rotation	–	L1-L2-L3 or L1-L3-L2	Read	32064	7D40	L1-L2-L3	–
		I1	A	0 to 10,000	Read	33536	8300	0	–
		I2	A	0 to 10,000	Read	33538	8302	0	–
		I3	A	0 to 10,000	Read	33540	8304	0	–
		Current I rms	A	0 to 10,000	Read	32896	8080	0	–
		V rms (Approx)	V	0 to 500	Read	32960	80C0	0	–
		Real Power Factor	–	0 to 1	Read	33024	8100	0	–
		True Power P	kW	0 to 10,000	Read	34688	8780	0	–
		Apparent Power S	kVA	0 to 10,000	Read	34816	8800	0	–
		Reactive Power Q	kVAR	0 to 10,000	Read	34944	8880	0	–
		iERS Saving Level	%	0 to 100	Read	35008	88C0	0	–
		Delay Angle	degree	0° to 55°	Read	22400	5780	0	–
		Backstop	degree	0° to 55°	Read	23040	5A00	0	–
		Delay Max	degree	0° to 55°	Read	22464	57C0	0	–
		Pres PF Degrees	degree	0° to 90°	Read	21824	5540	0	–
		Ref PF Degrees	degree	0° to 90°	Read	21760	5500	0	–
		Start Saving Level	%	50% to 80% of mtr FLA	Read	21320	5348	80%	–
		Last Peak (Start) Current	A	0 to 10,000	Read	38400	9600	0	–
		HeatSink Temp	°C	-20°C to 80°C	Read	36544	8EC0	ambient	–
		Motor Thermistor	–	0 to 1024	Read	10432	28C0	0	–
		Overload	%	0 to 100	Read	33408	8280	0	–
		Restart Pending	N/A	YES/NO	Read	37376	9200	NO	–
		Restarts Exceeded	N/A	YES/NO	Read	37568	92C0	NO	–
		Reset Delay	s	0 to 7200	R/W	20737	5101	0	–
		Reset Attempts	N/A	0 to 10	R/W	20738	5102	0	–
		Trip Free Time	s	0 to 7200	R/W	20739	5103	600	–
		Trip Event	N/A	100 to 2700	Read	20867	5183	0	–

3. Configuration and Parameters (continued)

Summary – Parameters for Touchscreen Setup – "Log" Category								
Group	Parameter	Units	Range	Read/ Write	Modbus Dec	Modbus Hex	Default Setting	User Setting
Event Times for Last Peak Start Currents, Last Temperatures, Last Overloads	(Event Time) Last Peak Start Current/Last Temperature/Last Overload	hh: mm: ss	Time since midnight; Days since 01/01/1984	Read	38464	9640	GMT	–
	(Event Time) Last Peak Start Current/Last Temperature/Last Overload -1			Read	38467	9643		–
	(Event Time) Last Peak Start Current/Last Temperature/Last Overload -2			Read	38470	9646		–
	(Event Time) Last Peak Start Current/Last Temperature/Last Overload -3			Read	38473	9649		–
	(Event Time) Last Peak Start Current/Last Temperature/Last Overload -4			Read	38476	964C		–
	(Event Time) Last Peak Start Current/Last Temperature/Last Overload -5			Read	38479	964F		–
	(Event Time) Last Peak Start Current/Last Temperature/Last Overload -6			Read	38482	9652		–
	(Event Time) Last Peak Start Current/Last Temperature/Last Overload -7			Read	38485	9655		–
	(Event Time) Last Peak Start Current/Last Temperature/Last Overload -8			Read	38488	9658		–
	(Event Time) Last Peak Start Current/Last Temperature/Last Overload -9			Read	38491	965B		–
Trip Log	Last Trip	–	0 to 65,535	Read	60608	ECC0	0	–
	Last Trip -1	–	0 to 65,535	Read	60609	ECC1	0	–
	Last Trip -2	–	0 to 65,535	Read	60610	ECC2	0	–
	Last Trip -3	–	0 to 65,535	Read	60611	ECC3	0	–
	Last Trip -4	–	0 to 65,535	Read	60612	ECC4	0	–
	Last Trip -5	–	0 to 65,535	Read	60613	ECC5	0	–
	Last Trip -6	–	0 to 65,535	Read	60614	ECC6	0	–
	Last Trip -7	–	0 to 65,535	Read	60615	ECC7	0	–
	Last Trip -8	–	0 to 65,535	Read	60616	ECC8	0	–
	Last Trip -9	–	0 to 65,535	Read	60617	ECC9	0	–
Start Current Log	Last Peak (Start) Current	A	0 to 10,000	Read	38400	9600	0	–
	Last Peak Start Current -1	A	0 to 10,000	Read	38402	9602	0	–
	Last Peak Start Current -2	A	0 to 10,000	Read	38404	9604	0	–
	Last Peak Start Current -3	A	0 to 10,000	Read	38406	9606	0	–
	Last Peak Start Current -4	A	0 to 10,000	Read	38408	9608	0	–
	Last Peak Start Current -5	A	0 to 10,000	Read	38410	960A	0	–
	Last Peak Start Current -6	A	0 to 10,000	Read	38412	960C	0	–
	Last Peak Start Current -7	A	0 to 10,000	Read	38414	960E	0	–
	Last Peak Start Current -8	A	0 to 10,000	Read	38416	9610	0	–

3. Configuration and Parameters (continued)

Summary – Parameters for Touchscreen Setup – "Log" Category (continued)									
–	Group	Parameter	Units	Range	Read/ Write	Modbus		Default Setting	User Setting
						Dec	Hex		
	Stop Current Log	Last Peak Stop Current	A	0 to 10,000	Read	39040	9880	0	–
		Last Peak Stop Current -1	A	0 to 10,000	Read	39042	9882	0	–
		Last Peak Stop Current -2	A	0 to 10,000	Read	39044	9884	0	–
		Last Peak Stop Current -3	A	0 to 10,000	Read	39046	9886	0	–
		Last Peak Stop Current -4	A	0 to 10,000	Read	39048	9888	0	–
		Last Peak Stop Current -5	A	0 to 10,000	Read	39050	988A	0	–
		Last Peak Stop Current -6	A	0 to 10,000	Read	39052	988C	0	–
		Last Peak Stop Current -7	A	0 to 10,000	Read	39054	988E	0	–
		Last Peak Stop Current -8	A	0 to 10,000	Read	39056	9890	0	–
		Last Peak Stop Current -9	A	0 to 10,000	Read	39058	9892	0	–
	Temperature Log	Last Temperature	°C	-20°C to 80°C	Read	39680	9B00	ambient	–
		Last Temperature -1	°C	-20°C to 80°C	Read	39681	9B01	ambient	–
		Last Temperature -2	°C	-20°C to 80°C	Read	39682	9B02	ambient	–
		Last Temperature -3	°C	-20°C to 80°C	Read	39683	9B03	ambient	–
		Last Temperature -4	°C	-20°C to 80°C	Read	39684	9B04	ambient	–
		Last Temperature -5	°C	-20°C to 80°C	Read	39685	9B05	ambient	–
		Last Temperature -6	°C	-20°C to 80°C	Read	39686	9B06	ambient	–
		Last Temperature -7	°C	-20°C to 80°C	Read	39687	9B07	ambient	–
		Last Temperature -8	°C	-20°C to 80°C	Read	39688	9B08	ambient	–
		Last Temperature -9	°C	-20°C to 80°C	Read	39689	9B09	ambient	–
	Overload Log	Last Overload	%	0 to 100	Read	40320	9D80	0	–
		Last Overload -1	%	0 to 100	Read	40321	9D81	0	–
		Last Overload -2	%	0 to 100	Read	40322	9D82	0	–
		Last Overload -3	%	0 to 100	Read	40323	9D83	0	–
		Last Overload -4	%	0 to 100	Read	40324	9D84	0	–
		Last Overload -5	%	0 to 100	Read	40325	9D85	0	–
		Last Overload -6	%	0 to 100	Read	40326	9D86	0	–
		Last Overload -7	%	0 to 100	Read	40327	9D87	0	–
		Last Overload -8	%	0 to 100	Read	40328	9D88	0	–
		Last Overload -9	%	0 to 100	Read	40329	9D89	0	–
	Totals Log	Number of Starts	–	0 to 4,294,836,225	Read	35840	8C00	0	–
		Download Log File	–	–	R/W	n/a	n/a	–	
		Clear Trip Log	–	–	R/W	n/a	n/a	–	

3. Configuration and Parameters (continued)

Summary–Parameters forTouchscreenSetup–"Device"Category								
Group	Parameter	Units	Range	Read/ Dec	Modbus		Default Setting	User Setting
					Dec	Hex		
(P25)	Update Firmware	–	–	R/W	–	–	–	
	Date	–	current date	R/W	–	–	–	
	Time	hh:mm:ss	GMT/local	R/W	14720	3980	GMT	
	Language	–	refer to the "Parameter Details" section for list of available languages	R/W	13376	3440	English	
	Passcode	–	0 to 255 per Byte	R/W	12864 12865 12866 12867	3240 3241 3242 3243	n/a	
	Backlight Timeout	s	0 to 3,600	R/W	14208	3780	60	
(P26) Networks	Modbus Network Address	–	1 to 32	R/W	16000	3E80	1	
	Modbus Network Baud Rate	Baud	9,600 19,200 38,400 57,600 115,200	R/W	16064	3EC0	19,200	
	Modbus Network Parity	–	none/odd/even	R/W	16128	3F00	even	
	Modbus Network Traffic LEDs	N/A	OFF/ON	R/W	14080	3700	OFF	
	Anybus/ModbusTCP/EtherNetIP	–	Address Serial Number Firmware Version Connection	Read	–	–	–	–
	Timeout	ms	0 to 60,000	R/W	15808	3DC0	5,000	
(P27)	Reset Defaults	–	Yes/No	R/W	62080	F280	No	
	About	–	VMX-synergy™ model #, serial #, software	Read	–	–	–	–
	Screen Lock	N/A	OFF/ON	R/W	12992	32C0	OFF	
	Date Format	–	dd/mm/yyyy mm/dd/yyyy	R/W	13248	33C0	dd/mm/yyyy	
	Temperature Format	degrees	°C/°F	R/W	13312	3400	°C	
	Parameters to USB		Yes/No	R/W	62272	F340	No	
	Parameters from USB		Yes/No	R/W	62336	F380	No	
	Service Code	for manufacturer's use only			13120	3340		

3. Configuration and Parameters (continued)

Auto-Setup Menu

Menu	Description	Min	Max	Default	Unit	Reg. Type
PNU 19200 **Auto Setup** ↓ ↓ **Application:**	The Unit has numerous preset applications built in as standard. Select the application best suited to the load. The selected application will automatically change several parameters and functions. Depending on the application loaded the "Trip Class" may also change. Refer to the separate 'applications section' for more details.	Default	End of list	Default		Read/Write
PNU 25664 **Auto Setup** ↓ ↓ **Trip Class**	The trip class is a numeric value that correlates the trip time with overload level. Select Trip class according to application requirements. The trip time depends on the selected Trip Class. The duration of the overload and the level of the over current. Refer to the Motor Overload 'cold' trip curves given in the Quick Start Guide. When "Class 20" or "Class30" are selected the Unit current rating (i-Unit) will be reduced to a lower value (i-rated).	Trip Class 10	Trip Class 30	Trip Class 10		Read/Write

3. Configuration and Parameters (continued)

Auto-Setup Menu (continued)

Menu	Description	Min	Max	Default	Unit	Reg. Type
PNU 25728 **Auto Setup** ↓ ↓ **Motor Current**	This should be set to the Full Load Current shown on the motor plate. The overload works with multiples of the set "Motor Current" (i-motor). Also referred to as Motor FLA.	10% I-rated	100% I-rated	100% I-rated	A	Read/Write
PNU 59392 ***Auto Setup*** ↓ ↓ **Control Method**	**Local Touch Screen**: Control using the button on the keypad. **User Programmable**: Control using the terminals. Function defined in "I/O" menu. **Two Wire Control**: Control using terminals. Functions fixed as shown on screen. **Three Wire Control**: Control using terminals. Functions fixed as shown on screen. **Modbus Network**: Control via remote Modbus network or remote Keypad or Modbus TCP.	Local Touch Screen	Modbus Network	Local Touch Screen		Read/Write
PNU 10880 **Auto Setup** ↓ ↓ **Digital Input Voltage**	The digital inputs D1-1I D1-2I D2-1I are designed to work with a range of control supplies. 230V: 'Active high level' Input voltage must be in the range 195.5V - 253V. 110V: 'Active high level' Input voltage must be in the range 93.5V - 121V. 24V: 'Active high level ' input voltage must be in the range 20.4V-26.4V. ⚠ It is important to ensure the "Digital input Voltage" corresponds to the voltage applied to the input.	230V	24Vdc	230V		Read/Write

3. Configuration and Parameters (continued)

Auto-Setup Menu (continued)

Menu	Description	Min	Max	Default	Unit	Reg. Type
PNU 19840 **Advanced** **Automatic Settings** ↓ **Automatic Pedestal**	Automatically controls the starting torque. On: The initial torque is increased until the motor starts to rotate at a moderate speed. Off: The initial torque is defined by the "Start Pedestal".	Off	On	Off		Read/Write
PNU 20352 **Advanced** **Automatic Settings** ↓ **Automatic Ramp**	Automatically controls the torque applied to the motor during the soft start. On: The torque is adjusted to suit the load. Off: The ramp time depends on the "Start Time" and "Current Limit".	Off	On	Off		Read/Write
PNU 19968 **Advanced** **Automatic Settings** ↓ **Automatic End Start (1)**	Automatically controls the time taken for the motor to start. On: The ramp time is shortened if the motor is at speed before the end of the "Start Time". Off: The ramp time depends on the "Start Time" and "Current Limit".	Off	On	Off		Read/Write
PNU 20160 **Advanced** **Automatic Settings** ↓ **Automatic Stop**	Automatically controls the soft stop to suit the application. This feature is particularly useful with pumping applications. On: If the motor is lightly loaded it decelerates rapidly to the point where the soft stop becomes useful. Off: The deceleration to the point where the soft stop becomes useful, will be slower.	Off	On	Off		Read/Write

3. Configuration and Parameters (continued)

Advanced Menu (continued)

Menu	Description	Min	Max	Default	Unit	Reg. Type
PNU 20608 **Advanced** **Automatic Settings** ↓ **Automatic Stop Profile**	Adjusts the response of the "Automatic Stop". Increase if the motor speed doesn't drop quickly enough. When the value is set to zero the "Automatic Stop" is effectively disabled.	Off	On	Off		Read/Write
PNU 20416 **Advanced** **Automatic Settings** ↓ **Automatic End Stop**	Automatically controls the "Stop Time". On: The ramp time is shortened if the motor reaches a very low speed before the end of the "Stop Time". Off: The ramp time " depends on the "Stop Time" and "Current Limit".	Off	On	Off		Read/Write
PNU 20480 **Advanced** **Automatic Settings** ↓ **Automatic Impact Load**	Automatically controls the maximum iERS saving level. On: The maximum iERS saving level ("BackStop") is reset to maximum during each load cycle. Off: The saving potential may be reduced on applications with heavy load cycles. Such as injection moulding machines.	Off	On	Off		Read/Write
PNU 20224 **Advanced** **Automatic Settings** ↓ **Auto Smooth Stop**	Automatically controls the soft stop to eliminate oscillations that can occur towards the end of the ramp. On: The soft stop is adjusted when oscillations are detected. Refer to "Auto smoothing Level". Off: The soft stop is unadjusted and torque fluctuations may cause instability. This can often occur in pumping applications.	Off	On	Off		Read/Write

3. Configuration and Parameters (continued)

Advanced Menu (continued)

Menu	Description	Min	Max	Default	Unit	Reg. Type
PNU 20672 **Advanced** **Automatic Settings** ↓ **Auto Smoothing Level**	Adjusts the response of the "Automatic smoothing". Increase to provide a greater smoothing effect If there are torque fluctuations that occur during the soft stop. When set to zero the smoothing is effectively disabled.	10	100	50	%	Read/Write
PNU 19904 **Advanced** **Automatic Settings** ↓ **Automatic End Start (2)**	Automatically controls the time taken for the motor to start. On: The ramp time is shortened if the motor current falls below the current limit level before the end of the "Start Time". Off: The ramp time depends on the "Start Time" and "Current Limit".	Off	On	Off		Read/Write
PNU 20032 **Advanced** **Automatic Settings** ↓ **Automatic End Start (3)**	Automatically controls the time taken for the motor to start. On: The ramp time is shortened if torque fluctuations occur before the end of the "Start Time". Off: The ramp time depends on the "Start Time" and "Current Limit".	Off	On	Off		Read/Write
PNU 768 **Advanced** **Automatic Settings** ↓ **Rate End Start (3)**	Adjusts the response of the "Automatic End Start (3)". Increase to provide a greater smoothing effect If there are torque fluctuations that occur during the soft start. When set to zero the smoothing is effectively disabled.	0	100	50	%	Read/Write

3. Configuration and Parameters (continued)

Advanced Menu (continued)

Menu	Description	Min	Max	Default	Unit	Reg. Type
PNU 704 **Advanced** **Start Settings** ↓ **Start Pedestal**	Percentage of the supply voltage applied to motor at the beginning of the soft start. Increase to provide more torque If the load fails to break away. Decrease if the motor accelerates too quickly.	10	100	20	%	Read/Write
PNU 53790 **Advanced** **Start Settings** **Start Current Limit** **Start Current Limit Trip**	Selects trip or continue if the current limit has been active for too long. On: The Unit will trip. Off: The start will continue regardless of the motor current level.	Off	On	On		Read/Write
PNU 26880 **Advanced** **Start Settings** **Start Current Limit** **Start Current Limit Level**	The current in Amps at which the soft Start ramp is held. Normally set to 350% of motor FLC. Increase if motor fails to accelerate at required rate. The "Current Limit Level" will affect actual time to start. If set too low the motor may not accelerate to full speed.	50% I-motor	450% I-motor2	350% I-motor	A	Read/Write
PNU 26944 **Advanced** **Start Settings** **Start Current Limit** **Start Current Limit Time**	The maximum time allowed for the current limit. If the current limit is still active at the end of this period, the Unit will either 'Trip' or 'continue'.	1	600	30	s	Read/Write

3. Configuration and Parameters (continued)

Advanced Menu (continued)

Menu	Description	Min	Max	Default	Unit	Reg. Type
PNU 7040 **Advanced** **Start Settings** **Kick Start** **Kick Start Time**	Time that the torque pulse is applied to load. Increase to provide more torque If the load fails to break away. Decrease if the motor accelerates too quickly.	10	2000	100	ms	Read/Write
PNU 640 **Advanced** **Start Settings** **Kick Start** **Kick Start Pedestal**	Percentage of the supply voltage applied to the motor during the 'kick' period. Increase to provide more torque If the load fails to break away. Decrease if the motor accelerates too quickly.	30	80	75	%	Read/Write
PNU 8320 **Advanced** **Start Settings** ↓ **Contactor Delay**	Time allowed for external contactors to close. Increase if contactors are driven by buffer relays or motor trips on phase loss when start signal applied. Decrease if response to start signal needs to be improved.	20	800	160	ms	Read/Write
PNU 7296 **Advanced** **Stop Settings** ↓ **Stop Time**	The time taken to soft stop from full voltage or the iERS level to the 'Stop Pedestal'. Normally set between 15 and 60 seconds. Actual time to get to 'Stop Pedestal' depends on the "Stop Current Limit Level". If set too long the motor may reach zero speed before the end of the time set. Refer to "Automatic End Stop".	0	300	0	s	Read/Write

3. Configuration and Parameters (continued)

Advanced Menu (continued)

Menu	Description	Min	Max	Default	Unit	Reg. Type
PNU 896 **Advanced** **Stop Settings** ↓ **Stop Pedestal**	Percentage of the supply voltage applied to the motor at the end of the soft stop. Increase if the motor crawls at the end of the soft stop. Decrease if a greater soft-stop effect is required at the end of the ramp.	10	40	10	%	Read/Write
PNU 53791 **Advanced** **Stop Settings** **Stop Current Limit** **Stop Current Limit Trip**	Selects trip or continue if the stop current limit has been active for too long. On: The Unit will trip. Off: The stop will continue regardless of the motor current level.	Off	On	Off		Read/Write
PNU 28800 **Advanced** **Stop Settings** **Stop Current Limit** **Stop Current Limit Level**	The current in Amps at which the soft stop ramp is not allowed to go above. Normally set to 350% motor FLC. Increase if motor decelerates too rapidly. The current limit level will affect actual time to stop the motor.	100% I-motor	450% I-motor	350% I-motor	A	Read/Write
PNU 28864 **Advanced** **Stop Settings** **Stop Current Limit** **Stop Current Limit Time**	The maximum time allowed for the current limit. If the current limit is still active at the end of this period, the Unit will either trip or continue.	1	300	10	s	Read/Write

3. Configuration and Parameters (continued)

Advanced Menu (continued)

Menu	Description	Min	Max	Default	Unit	Reg. Type
PNU 25664 **Advanced** **Motor Protection** ↓ **Trip Class**	The trip class is a numeric value that correlates the trip time with overload level. Select Trip class according to application requirements. The trip time depends on the selected Trip Class. The duration of the overload and the level of the over current. Refer to the Motor Overload 'cold' trip curves given in the Quick Start Guide. When "Class 20" or "Class30" are selected the Unit current rating (i-Unit) will be reduced to a lower value (i-rated).	Trip Class 10	Trip Class 30	Trip Class 10		Read/Write
PNU 53787 **Advanced** **Motor Protection** **Low Current Settings** **Low Current Trip**	This can be used to detect if the motor is running lightly loaded. On: The Unit will trip. This feature is not active during soft start and soft stop. Off: The Unit will continue to operate regardless of motor current.	Off	On	Off		Read/Write
PNU 26304 **Advanced** **Motor Protection** **Low Current Settings** **Low Current Trip Level**	The current in Amps that will cause a trip. A trip will occur if the motor current is less than the "Trip Level" for the "Trip Time".	25% I-motor	100% I-motor	25% I-motor	A	Read/Write

3. Configuration and Parameters (continued)

Advanced Menu (continued)

Menu	Description	Min	Max	Default	Unit	Reg. Type
PNU 26368 **Advanced** **Motor Protection** **Low Current Settings** **Low Current Trip Time**	The trip time for the Low current trip. A trip will occur if the motor current is less than the "Trip Level" for the "Trip Time".	100	9000	100	ms	Read/Write
PNU 53793 **Advanced** **Motor Protection** **Shearpin Settings** **Shearpin Trip**	The shearpin is an electronic equivalent of a mechanical shearpin. On: The Unit will trip. This feature is not active during soft start and soft stop. Off: The Unit will continue to operate regardless of motor current level.	Off	On	On		Read/Write
PNU 27584 **Advanced** **Motor Protection** **Shearpin Settings** **Shearpin Trip Current**	The current in Amps that will cause a "Shearpin Trip". A trip will occur if the motor current is greater than the "Trip Level" for the "Trip Time".	100% I-motor	450% I-motor	450% I-motor	A	Read/Write
PNU 27648 **Advanced** **Motor Protection** **Shearpin Settings** **Shearpin Trip Time**	The trip time for the Shearpin trip. A trip will occur if the motor current is greater than the "Trip Level" for the "Trip Time".	100	9000	100	ms	Read/Write

3. Configuration and Parameters (continued)

Advanced Menu (continued)

Menu	Description	Min	Max	Default	Unit	Reg. Type
PNU 53792 **Advanced** **Motor Protection** **Overload Settings** **Overload Trip**	The Unit has an "Overload" function that is an electronic equivalent to a thermal overload. On: The Unit will trip when the "Overload" capacity (ModbusPNU 33408) exceeds 100%. Off: The Unit will continue to operate regardless of motor current level. *Not recommended.*	Off	On	On		Read/Write
PNU 28224 **Advanced** **Motor Protection** **Overload Settings** **Overload Level**	Determines the level in Amps at which the overload will start. Normally set to 115% of the set motor current (i-motor). Reduce to speed up trip response.	50% I-motor	125% I-motor	115% I-motor	A	Read/Write
PNU 21120 **Advanced** **iERS** ↓ **iERS**	Enables and disables the intelligent Energy Recovery System feature (iERS). On: The voltage to the motor will be regulated to ensure optimum efficiency. Off: The feature is disabled, and the motor operates at full voltage. Internal bypass closed.	Off	On	Off		Read/Write
PNU 7360 **Advanced** **iERS** ↓ **Dwell Time**	The time from the End of the start to the point where the iERS saving mode becomes active. Normally set to 5 seconds to ensure the motor is at full speed before the iERS saving becomes active, Increase to allow time for the motor to stabilise.	1	300	5	s	Read/Write

3. Configuration and Parameters (continued)

Advanced Menu (continued)

Menu	Description	Min	Max	Default	Unit	Reg. Type
PNU 21184 **Advanced** **iERS** ↓ **iERS Rate**	Determines the rate at which the load is regulated during the iERS energy saving mode. During periods of instability the "Current Irms" and "True Power Factor" will oscillate rapidly. Increase if the application shows signs of instability. Reduce to increase the speed of response.	0	100	25	%	Read/Write
PNU 21376 **Advanced** **iERS** ↓ **iERS Level**	Determines the maximum energy saving potential. Reduce if the application shows signs of instability. The amount of energy that can be saved may fall as the "iERS level" is reduced.	0	100	100	%	Read/Write
PNU 35200 **Advanced** **iERS** ↓ **Fixed Voltage**	User settable voltage level for power calculations. Use to improve accuracy of power calculations.	100	500	100	V	Read/Write
PNU 35264 **Advanced** **iERS** ↓ **Fixed Voltage**	Selects the source for the voltage value used in the power calculations. on: KW KVar and KVA are calculated using the "Fixed Voltage". off: KW KVar and KVA are calculated using the internally measured voltage.	Off	On	Off		Read/Write

3. Configuration and Parameters (continued)

Advanced Menu (continued)

Menu	Description	Min	Max	Default	Unit	Reg. Type
PNU 59392 **Advanced** ↓ ↓ **Control Method**	Local Touch Screen: Control using the button on the keypad. User Programmable: Control using the terminals. Function defined in "I/O" menu. Two Wire Control: Control using terminals. Functions fixed as shown on screen. Three Wire Control: Control using terminals. Functions fixed as shown on screen. Modbus Network: Control via remote Modbus network or remote Keypad or Modbus TCP.	Local Touch Screen	Modbus Network	Local Touch Screen		Read/Write
PNU 44864 **Advanced** **Trip Settings** ↓ **Trip Sensitivity**	Adjusts the reaction time to fault trips. Increase "Trip Sensitivity" to slow the response to fault trips. Sometimes useful on sites were electrical noise is causing nuisance tripping. This is a global setting. Increasing "Trip Sensitivity" will slow the response of all the trips.	0	100	0	%	Read/Write
PNU 53803 **Advanced** **Trip Settings** ↓ **Cover Open Trip**	For safety purposes the Unit has been designed to trip if the front cover is open. On: The Unit will trip if the front cover is open. This trip is active at all times. Off: The Unit will continue to operate with the cover open.	Off	On	Off		Read/Write

3. Configuration and Parameters (continued)

Advanced Menu (continued)

Menu	Description	Min	Max	Default	Unit	Reg. Type
PNU 53793 **Advanced** **Trip Settings** ↓ **Shearpin Trip**	The shearpin is an electronic equivalent of a mechanical shearpin. On: The Unit will trip. This feature is not active during soft start and soft stop. Off: The Unit will continue to operate regardless of motor current level.	Off	On	On		Read/Write
PNU 53792 **Advanced** **Trip Settings** ↓ **Overload Trip**	The Unit has an "Overload" function that is an electronic equivalent to a thermal overload. On: The Unit will trip when the "Overload" capacity (ModbusPNU 33408) exceeds 100%. Off: The Unit will continue to operate regardless of motor current level.	Off	On	On		Read/Write
PNU 53787 **Advanced** **Trip Settings** ↓ **Low Current Trip**	This can be used to detect if the motor is running lightly loaded. On: The Unit will trip. This feature is not active during soft start and soft stop. Off: The Unit will continue to operate regardless of motor current.	Off	On	Off		Read/Write
PNU 53790 **Advanced** **Trip Settings** ↓ **Start Current Limit Trip**	Selects trip or continue if the current limit has been active for too long. On: The Unit will trip. Off: The start will continue regardless of the motor current level.	Off	On	On		Read/Write

3. Configuration and Parameters (continued)

Advanced Menu (continued)

Menu	Description	Min	Max	Default	Unit	Reg. Type
PNU 53791 **Advanced** **Trip Settings** ↓ **Stop Current Limit Trip**	*Selects trip or continue if the stop current limit has been active for too long.* *On: The Unit will trip.* *Off: The stop will continue regardless of the motor current level.*	Off	On	Off		Read/Write
PNU 53794 **Advanced** **Trip Settings** ↓ **PTC Motor Thermistor Trip**	A single PTC motor thermistor or set of PTC motor thermistors can be connected to the PTC terminals. On: The Unit will trip if the motor thermistor exceeds its response temperature or the PTC input is open circuit. Off: The unit will not trip regardless of motor rotation.	Off	On	Off		Read/Write
PNU 53808 **Advanced** **Trip Settings** ↓ **L1-L2-L3 Trip**	Determines if supply phase sequence is incorrect for motor rotation. On: Trips if the phase sequence is L1-L2-L3. Off: The unit will not trip regardless of motor rotation.	Off	On	Off		Read/Write
PNU 53807 **Advanced** **Trip Settings** ↓ **L1-L3-L2 Trip**	Determines if supply phase sequence is incorrect for motor rotation. On: Trips if the phase sequence is L1-L3-L2. Off: The unit will not trip regardless of motor rotation.	Off	On	Off		Read/Write

3. Configuration and Parameters (continued)

Advanced Menu (continued)

Menu	Description	Min	Max	Default	Unit	Reg. Type
PNU 53804 **Advanced** **Trip Settings** ↓ **Remote Start Trip**	For safety reasons the Unit will trip during some operations if the remote start signal is active. On: Trips if the remote start signal is active when the Unit is powered up or a reset is applied. Off: The Unit will not trip and may start unexpectedly if the start signal is accidently left active.	Off	On	On		Read/Write
PNU 53775 **Advanced** **Trip Settings** ↓ **Current Sensor Trip**	Detects if the internal current sensors have failed or reading a very low level. On: The Unit will trip if the internal current sensors fail or the current measured falls to a very low level. Off: Will continue to operate even if the sensor has failed. Measurements and overload protection may be affected.	Off	On	Off		Read/Write
PNU 53782 **Advanced** **Trip Settings** ↓ **Fan Trip**	Detects if the cooling fans have failed. On: The Unit trips if the cooling fans fitted to the Unit fail. Off: Will continue to operate and is likely to trip on a thermal trip as the heatsink will not be sufficiently cooled.	Off	On	On		Read/Write

3. Configuration and Parameters (continued)

Advanced Menu (continued)

Menu	Description	Min	Max	Default	Unit	Reg. Type
PNU 53796 **Advanced** **Trip Settings** ↓ **Communications Trip**	Detects if the communications bus has failed or become inactive. To keep the bus active there must be at least one Modbus read or write (any PNU) during the "Timeout ms" period (ModbusPNU 15808). On:Communication trip enabled. Off: Communication trip disabled.	Off	On	On		Read/Write
PNU 53769 **Advanced** **Trip Settings** ↓ **Shut Down (1)**	This feature controls the soft stop improve stability. On: The stop time is truncated if the motor experiences severe torque fluctuations during the soft stop. Off: Follows normal soft stop time.	Off	On	On		Read/Write
PNU 53770 **Advanced** **Trip Settings** ↓ **Shut Down (2)**	This feature controls the soft stop improve stability. On: The stop time is truncated if the motor experiences severe torque fluctuations during the soft stop. Off: Follows normal soft stop time.	Off	On	On		Read/Write

The Shut Down Trips are in operation during the soft stop ramp.

At the end of the soft stop ramp, occasionally the motor can become unstable due to torque fluctuations.

If the torque fluctuations get too bad then VMX-synergy™ may trip, this could cause issues with the restart. With Shut Down Trips turned on, if the torque fluctuations are experienced VMX-synergy™ will automatically stop the soft stop ramp and let the motor coast to a full stop. This stops VMX-synergy™ tripping and allows for a restart without resetting a trip. This is normally only for a very small time due to torque fluctuations occurring at the end of a soft stop ramp. If a Shut Down occurs, then it is logged in the log file but will not affect the operation of VMX-synergy™. Both shut down trips have to do with rapid changes in power factor. Soft stop smoothing will keep shut down trips from happening.

3. Configuration and Parameters (continued)

Advanced Menu (continued)

Menu	Description	Min	Max	Default	Unit	Reg. Type
PNU 53774 **Advanced** **Trip Settings** ↓ **Thyristor Firing Trip**	Detects if there is a fault with one or more of the internal Thyristors or bypass relays. On: Trips if one or more of the Thyristors/bypass relays has failed short circuit. ISOLATE SUPPLY. Check by measuring the resistance between L1 -T1 L2 -T2 L3 -T3 (Anything < 10R is assumed short circuit). Off (not recommended): The Unit will attempt to start and run although the operation may be erratic. Operating in this mode for prolonged periods may result in SCR failure.	Off	On	On		Read/Write
PNU 53777 **Advanced** **Trip Settings** ↓ **Motor Side Phase Loss**	Detects if there is a disconnection between the Unit output and the motor. On: Trips if there is a disconnection between the output side of the Unit and the motor. Off: The Unit will attempt to start and run although the operation may be erratic. Operating in this mode for prolonged periods may result in SCR failure.	Off	On	On		Read/Write

3. Configuration and Parameters (continued)

Advanced Menu (continued)

Menu	Description	Min	Max	Default	Unit	Reg. Type
PNU 53781 **Advanced** **Trip Settings** ↓ **Sensing Fault Trip**	Detects if there is a fault with operation of one or more of the internal Thyristors. On: Trips if one or more of the Thyristors fails to turn on properly. Off: The Unit will attempt to start and run although the operation may be erratic. Operating in this mode for prolonged periods may result in SCR failure.	Off	On	On		Read/Write
PNU 53768 **Advanced** **Trip Settings** ↓ **Thermal Sensor Trip**	Detects if the internal temperature sensor has malfunctioned. On: The Unit will trip if the internal temperature sensor malfunctions. Off: The Unit will continue to operate even if the temperature sensor has malfunctioned. Operating in this mode for prolonged periods may result in SCR failure.	Off	On	On		Read/Write
PNU 53795 **Advanced** **Trip Settings** ↓ **External Trip**	Allows a trip to be forced using one of the digital inputs. On: Trips when the programmed input is active. Off: External Trip is disabled.	Off	On	On		Read/Write

3. Configuration and Parameters (continued)

Advanced Menu (continued)

Menu	Description	Min	Max	Default	Unit	Reg. Type
PNU 53800 **Advanced** **Trip Settings** ↓ **Operation 3 Trip**	Detects if the Control Board has failed to operate normally. On: Operation 3 trip enabled. Off: Operation 3 trip disabled.	Off	On	On		Read/Write
PNU 53798 **Advanced** **Trip Settings** ↓ **Operation 1 Trip**	Detects if the keypad Board has failed to operate normally. On: Operation 1 trip enabled. Off: Operation 1 trip disabled.	Off	On	Off		Read/Write
PNU 53799 **Advanced** **Trip Settings** ↓ **Operation 2 Trip**	Detects if the logging function has failed to operate normally. On: Operation 2 trip enabled. Off: Operation 2 trip disabled.	Off	On	Off		Read/Write
PNU 53762 **Advanced** **Trip Settings** ↓ **Input Side Phase Loss**	Detects if there is a disconnection between the Unit input and the supply when the motor is running. On: Trips if there is a disconnection between the input side of the Unit and the supply when the motor is running. Off: The Unit will attempt to run although the operation may be erratic. Operating in this mode for prolonged periods may result in SCR failure.	Off	On	On		Read/Write

3. Configuration and Parameters (continued)

Advanced Menu (continued)

Menu	Description	Min	Max	Default	Unit	Reg. Type
PNU 128 **Advanced** ↓ ↓ **Firing Mode**	Set to correspond with Unit connection to the Motor. Refer to connection diagrams. In-Line: The Unit is connected in-line with a delta or star connected motor. In-Delta: The Unit is connected inside the Delta of the motor. The iERS function is disabled.	In-Line	In-Delta	In-Line		Read/Write
PNU 192 **Advanced** ↓ ↓ **Legacy Delta Mode**	Allows the Unit to be retro-fitted into "Delta" applications that previously used QFE/XFE (5MC). On: Operates in QFE/XFE (5MC) delta compatibility mode. Off: Operates normally. Refer to Unit Delta connection diagram in the Quick Start Guide.	Off	On	Off		Read/Write
PNU 14144 **Advanced** ↓ ↓ **Main Contactor Control**	The unit is configured to start and stop when the main contactor opens and closes. On: When a zero stop time is set some faults will be ignored when main contactor opens. Off: The unit may trip when the main contactor opens.	Off	On	Off		Read/Write
PNU 28160 **Advanced** ↓ ↓ **Hand/Auto Control**	A Hand-Auto selection switch can be connected to Digital Input D1-2I to change the 'Control Method'. This can be used to change the Start/Stop to 'Hand' if the Communications fails. D1-2I = 0: Control Method is set to "Modbus Network" (Auto). Hand: Input D1-1I = Start/Stop, Input D2-1I = Reset. Auto: PNU 17920 = Start/Stop, PNU 18368 = Reset.	Off	On	On		

3. Configuration and Parameters (continued)

Advanced Menu (continued)

Menu	Description	Min	Max	Default	Unit	Reg. Type
PNU 20736 **Advanced** **Auto Reset** ↓ **Auto Reset**	Enables the Auto Reset Feature. On: The Auto Reset feature is Enabled. Off: The Auto Reset feature is disabled and all counters will be re-initialised.	Off	On	Off		Read/Write
PNU 20737 **Advanced** **Auto Reset** ↓ **Reset Delay**	The delay between the trip event and the automatic reset, the unit will re-start following the reset if the start signal is active. If this is set to zero at any point the Auto Reset feature will terminate and the counters will be re-initialised. When the delay is active the Restart Pending parameter is set and the time remaining can be viewed in the monitor menu.	0	7200	0	s	Read/Write
PNU 14144 **Advanced** **Auto Reset** ↓ **Reset Attempts**	The number of restart attempts allowed before the Auto Reset terminates. If the Auto Reset has been successful, the counter is reset back to its maximum value when the unit has been running fault free for the Trip Free Time. If the Auto Restart has been unsuccessful the counters are re-initialised by applying a reset signal or removing the start signal. If set to zero at any point the Auto Reset feature will terminate and the counters will be re-initialised. The number of attempts remaining can be viewed in the Monitor menu.	0	10	0		Read/Write

3. Configuration and Parameters (continued)

Advanced Menu (continued)

Menu	Description	Min	Max	Default	Unit	Reg. Type
PNU 20736 **Advanced** **Auto Reset** ↓ **Trip Free Time**	The time the unit must be run trip free before the counters are re-initialised back to zero. If set to zero at any point the Auto Reset feature will terminate and the counters will be re-initialised. The Trip Free Time can be viewed in the Monitor menu.	0	7200	600	s	Read/Write
PNU 20800 **Advanced** **Auto Reset** **Reset Trips** **Input Side Phase Loss**	Allows the user to select whether the unit will auto reset if an Input Side Phase Loss Trip occurs. On: The trip will auto reset when the Reset Delay reaches zero. Off: The trip will not auto reset.	Off	On	On		Read/Write
PNU 20801 **Advanced** **Auto Reset** **Reset Trips** **Thermal**	Allows the user to select whether the unit will auto reset if a Thermal Trip occurs. On: The trip will auto reset when the Reset Delay reaches zero. Off: The trip will not auto reset.	Off	On	On		Read/Write
PNU 20802 **Advanced** **Auto Reset** **Reset Trips** **Thyristor Firing**	Allows the user to select whether the unit will auto reset if a Thyristor Firing Trip occurs. On: The trip will auto reset when the Reset Delay reaches zero. Off: The trip will not auto reset.	Off	On	On		

3. Configuration and Parameters (continued)

Advanced Menu (continued)

.	Description	Min	Max	Default	Unit	Reg. Type
PNU 20803 **Advanced** **Auto Reset** **Reset Trips** **Motor Side Phase Loss**	Allows the user to select whether the unit will auto reset if a Motor Side Phase Loss Trip occurs. On: The trip will auto reset when the Reset Delay reaches zero. Off: The trip will not auto reset.	Off	On	On		Read/Write
PNU 20805 **Advanced** **Auto Reset** **Reset Trips** **Control Voltage Low**	Allows the user to select whether the unit will auto reset if a Control Voltage Low Trip occurs. On: The trip will auto reset when the Reset Delay reaches zero. Off: The trip will not auto reset	Off	On	On		Read/Write
PNU 20806 **Advanced** **Auto Reset** **Reset Trips** **Sensing Fault**	Allows the user to select whether the unit will auto reset if a Sensing Fault Trip occurs. On: The trip will auto reset when the Reset Delay reaches zero. Off: The trip will not auto reset.	Off	On	On		Read/Write
PNU 20802 **Advanced** **Auto Reset** **Reset Trips** **Fan**	Allows the user to select whether the unit will auto reset if a Fan Trip occurs. On: The trip will auto reset when the Reset Delay reaches zero. Off: The trip will not auto reset.	Off	On	On		

3. Configuration and Parameters (continued)

Advanced Menu (continued)

Menu	Description	Min	Max	Default	Unit	Reg. Type
PNU 20810 **Advanced** **Auto Reset** **Reset Trips** **Low Current**	Allows the user to select whether the unit will auto reset if a Low Current Trip occurs. On: The trip will auto reset when the Reset Delay reaches zero. Off: The trip will not auto reset.	Off	On	On		Read/Write
PNU 20811 **Advanced** **Auto Reset** **Reset Trips** **Current Limit Time Out**	Allows the user to select whether the unit will auto reset if a Current Limit Time Out Trip occurs. On: The trip will auto reset when the Reset Delay reaches zero. Off: The trip will not auto reset.	Off	On	On		Read/Write
PNU 20812 **Advanced** **Auto Reset** **Reset Trips** **Overload**	Allows the user to select whether the unit will auto reset if an Overload Trip occurs. On: The trip will auto reset when the Reset Delay reaches zero. Off: The trip will not auto reset.	Off	On	On		Read/Write
PNU 20813 **Advanced** **Auto Reset** **Reset Trips** **Shearpin**	Allows the user to select whether the unit will auto reset if a Shearpin Trip occurs. On: The trip will auto reset when the Reset Delay reaches zero. Off: The trip will not auto reset.	Off	On	On		

3. Configuration and Parameters (continued)

Advanced Menu (continued)

Menu	Description	Min	Max	Default	Unit	Reg. Type
PNU 20814 **Advanced** **Auto Reset** **Reset Trips** **PTC Thermistor**	Allows the user to select whether the unit will auto reset if a PTC Thermistor Trip occurs. On: The trip will auto reset when the Reset Delay reaches zero. Off: The trip will not auto reset.	Off	On	Off		Read/Write
PNU 20815 **Advanced** **Auto Reset** **Reset Trips** **External**	Allows the user to select whether the unit will auto reset if an External Trip occurs. On: The trip will auto reset when the Reset Delay reaches zero. Off: The trip will not auto reset.	Off	On	On		Read/Write
PNU 20816 **Advanced** **Auto Reset** **Reset Trips** **Communications**	Allows the user to select whether the unit will auto reset if a Communications Trip occurs. On: The trip will auto reset when the Reset Delay reaches zero. Off: The trip will not auto reset.	Off	On	On		Read/Write
PNU 20817 **Advanced** **Auto Reset** **Reset Trips** **Bypass**	Allows the user to select whether the unit will auto reset if a Bypass Trip occurs. On: The trip will auto reset when the Reset Delay reaches zero. Off: The trip will not auto reset.	Off	On	On		

3. Configuration and Parameters (continued)

Advanced Menu (continued)

Menu	Description	Min	Max	Default	Unit	Reg. Type
PNU 20818 **Advanced** **Auto Reset** **Reset Trips** **Cover**	Allows the user to select whether the unit will auto reset if a Cover Trip occurs. On: The trip will auto reset when the Reset Delay reaches zero. Off: The trip will not auto reset.	Off	On	Off		Read/Write
PNU 20820 **Advanced** **Auto Reset** **Reset Trips** **Phase Rotation**	Allows the user to select whether the unit will auto reset if a Phase Rotation Trip occurs. On: The trip will auto reset when the Reset Delay reaches zero. Off: The trip will not auto reset.	Off	On	Off		Read/Write
PNU 20821 **Advanced** **Auto Reset** **Reset Trips** **Operation 4**	Allows the user to select whether the unit will auto reset if an Operation 4 Trip occurs. On: The trip will auto reset when the Reset Delay reaches zero. Off: The trip will not auto reset.	Off	On	On		Read/Write
PNU 20822 **Advanced** **Auto Reset** **Reset Trips** **Current sensor**	Allows the user to select whether the unit will auto reset if a Current Sensor Trip occurs. On: The trip will auto reset when the Reset Delay reaches zero. Off: The trip will not auto reset.	Off	On	On		

3. Configuration and Parameters (continued)

Advanced Menu (continued)

Menu	Description	Min	Max	Default	Unit	Reg. Type
PNU 20823 **Advanced** **Auto Reset** **Reset Trips** **Operation 3**	Allows the user to select whether the unit will auto reset if an Operation 3 Trip occurs. On: The trip will auto reset when the Reset Delay reaches zero. Off: The trip will not auto reset.	Off	On	On		Read/Write
PNU 20824 **Advanced** **Auto Reset** **Reset Trips** **Operation 1**	Allows the user to select whether the unit will auto reset if an Operation 1 Trip occurs. On: The trip will auto reset when the Reset Delay reaches zero. Off: The trip will not auto reset.	Off	On	Off		Read/Write
PNU 20825 **Advanced** **Auto Reset** **Reset Trips** **Operation 2**	Allows the user to select whether the unit will auto reset if an Operation 2 Trip occurs. On: The trip will auto reset when the Reset Delay reaches zero. Off: The trip will not auto reset.	Off	On	On		Read/Write
PNU 20826 **Advanced** **Auto Reset** **Reset Trips** **Operation 5**	Allows the user to select whether the unit will auto reset if Operation 5 Trip occurs. On: The trip will auto reset when the Reset Delay reaches zero. Off: The trip will not auto reset.	Off	On	On		

3. Configuration and Parameters (continued)

Input/Output

Menu	Description	Min	Max	Default	Unit	Reg. Type
PNU 10880 **I/O** **Digital Inputs** ↓ **Digital Input Voltage**	The digital inputs D1-1I D1-2I D2-1I are designed to work with a range of control supplies. 230V: 'Active high level' Input voltage must be in the range 195.5V - 253V. 110V: 'Active high level' Input voltage must be in the range 93.5V - 121V. 24V: 'Active high level ' input voltage must be in the range 20.4V-26.4V. It is important to ensure the "Digital input Voltage" corresponds to the voltage applied to the input. Failure to do so may result in damage.	230V	24Vdc	230V		Read/Write
PNU 59392 **I/O** **Digital Inputs** ↓ **Control Method**	Local Touch Screen: Control using the button on the keypad. User Programmable: Control using the terminals. Function defined in "I/O" menu. Two Wire Control: Control using terminals. Functions fixed as shown on screen. Three Wire Control: Control using terminals. Functions fixed as shown on screen. Modbus Network: Control via remote Modbus network or remote Keypad or Modbus TCP.	Local Touch Screen	Modbus Network	Local Touch Screen		Read/Write
PNU 10944 **I/O** **Digital Inputs** **Digital Input 1 (D1-1I)** **Select Function**	Allows the Digital input (D1-1I) to be mapped to different functions. The selected function will change in proportion with the input. Digital inputs can only be mapped if the "Control Method" is set to "User Programmable".	Off	End of list	Start/Stop		Read/Write

3. Configuration and Parameters (continued)

Input/Output (continued)

Menu	Description	Min	Max	Default	Unit	Reg. Type
PNU 10945 **I/O** **Digital Inputs** **Digital Input 2 (D1-2I)** **Select Function**	Allows the Digital input (D1-2I) to be mapped to different functions. The selected function will change in proportion with the input. Digital inputs can only be mapped if the "Control Method" is set to "User Programmable".	Off	End of list	Off		Read/Write
PNU 11266 **I/O** **Digital Inputs** **Digital Input 2 (D1-2I)** **High Input = 1 Sets Value**	Allows the polarity of the input to be reversed. On: When the input is on the selected function will be on. Off: When the input is off the selected function will be on.	Off	On	On		Read/Write
PNU 10946 **I/O** **Digital Inputs** **Digital Input 3 (D2-1I)** **Select Function**	Allows the Digital input (D2-1I) to be mapped to different functions. The selected function will change in proportion with the input. Digital inputs can only be mapped if the "Control Method" is set to "User Programmable".	Off	End of list	Reset		Read/Write
PNU 11268 **I/O** **Digital Inputs** **Digital Input 3 (D2-1I)** **High Input = 1 Sets Value**	Allows the polarity of the input to be reversed. On: When the input is on the selected function will be on. Off: When the input is off the selected function will be on.	Off	On	On		Read/Write

3. Configuration and Parameters (continued)

Input/Output (continued)

Menu	Description	Min	Max	Default	Unit	Reg. Type
PNU 11584 **I/O** **Digital Outputs** **Digital Output 1 N/C(12)** **Select Function**	Allows the Digital output (N/C (12)) to be mapped to different functions. The output will change in proportion with the selected output.	Off	End of list	Error		Read/Write
PNU 11904 **I/O** **Digital Outputs** **Digital Output 1 N/C(12)** **High Output = 1 When Value**	Allows the polarity of the output to be reversed. On: When the selected function is on the output will be on. Off: When the selected function is on the output is off.	Off	On	On		Read/Write
PNU 11585 **I/O** **Digital Outputs** **Digital Output 2 N/O(24)** **Select Function**	Allows the Digital output (N/0 (24)) to be mapped to different functions. The output will change in proportion with the selected output.	Off	End of list	Error		Read/Write
PNU 11906 **I/O** **Digital Outputs** **Digital Output 2 N/O(24)** **High Output = 1 When Value**	Allows the polarity of the output to be reversed. On: When the selected function is on the output will be on. Off: When the selected function is on the output is off.	Off	On	On		Read/Write

3. Configuration and Parameters (continued)

Input/Output (continued)

Menu	Description	Min	Max	Default	Unit	Reg. Type
PNU 11908 **I/O** **Digital Outputs** **Digital Output 3 N/O(34)** **High Output = 1 When Value**	Allows the polarity of the output to be reversed. On: When the selected function is on the output will be on. Off: When the selected function is on the output is off.	Off	On	On		Read/Write
PNU 11587 **I/O** **Digital Outputs** **Digital Output 4 N/O(44)** **Select Function**	Allows the Digital output (N/0 (44)) to be mapped to different functions. The output will change in proportion with the selected output.	Off	End of list	End of Start		Read/Write
PNU 11910 **I/O** **Digital Outputs** **Digital Output 4 N/O(44)** **High Output = 1 When Value**	Allows the polarity of the output to be reversed. On: When the selected function is on the output will be on. Off: When the selected function is on the output is off.	Off	On	On		Read/Write
PNU 9600 **I/O** **Analogue Inputs** ↓ **Analogue Input Type**	Defines the function of the analogue input (AI). 0-10V: The input voltage varies from 0-10V. 4-20mA: The input varies from 4 to 20mA.	0 - 10V	4 - 20mA	0 - 10V		Read/Write

3. Configuration and Parameters (continued)

Input/Output (continued)

Menu	Description	Min	Max	Default	Unit	Reg. Type
PNU 9728 **I/O** **Analogue Inputs** ↓ **Scaling Level**	Allows the selected function to be scaled. The selected function will change in proportion with the input. The function will be at its "Scaling Level" when the input is at its maximum.	0	Max value	Max value	%	Read/Write
PNU 8960 **I/O** **Analogue Outputs** ↓ **Analogue Output Type**	Defines the physical function of the analogue output (AO). 0-10V: The output voltage varies from 0 to 10V. 4-20mA: The output current varies from 4 to 20mA.	0 - 10V	4 - 20mA	0 - 10V		Read/Write
PNU 9024 **I/O** **Analogue Outputs** ↓ **Select Function**	Allows the Analogue output to be mapped to different PNU functions. The output will change in proportion with the selected function. By default, the output will be at a maximum when the selected function equals its maximum value.	Off	End of list	Off		Read/Write
PNU 9088 **I/O** **Analogue Outputs** ↓ **Scaling Level**	Allows the selected function to be scaled. The output will change in proportion with the selected function. The output will be at a maximum when the selected function equals the "Scaling Level".	0	Max value	0	%	Read/Write

3. Configuration and Parameters (continued)

Input/Output (continued)

Menu	Description	Min	Max	Default	Unit	Reg. Type
PNU 53794 **I/O** ↓ ↓ **PTC Motor Thermistor Trip**	A single PTC motor thermistor or set of PTC motor thermistors can be connected to the PTC terminals. On: The Unit will trip if the motor thermistor exceeds its response temperature or the PTC input is open circuit. Off: The Unit will continue to operate.	Off	On	Off		Read/Write

3. Configuration and Parameters (continued)

Monitor

Menu	Description	Min	Max	Default	Unit	Reg. Type
PNU 32000 Monitor ↓ ↓ Line Frequency	The frequency of the 3-phase supply.	45	65	-	Hz	Read Only
PNU 32064 Monitor ↓ ↓ Phase Rotation	Indicates the phase sequence of the incoming supply. RYB = L1-L2-L3. RBY = L1-L3-L2.	L1-L2-L3	L1-L3-L2	L1-L2-L3		Read Only
PNU 33536 Monitor ↓ ↓ I1	The RMS current on phase L1.	0	10000	0	A	Read Only
PNU 33536 Monitor ↓ ↓ I2	The RMS current on phase L1.	0	10000	0	A	Read Only

3. Configuration and Parameters (continued)

Monitor (continued)

Menu	Description	Min	Max	Default	Unit	Reg. Type
PNU 33540 **Monitor** ↓ ↓ **I3**	The RMS current on phase L3.	0	1000	0	A	Read Only
PNU 32896 **Monitor** ↓ ↓ **Current Irms**	The RMS motor current. This is the maximum of the 3 phases. This value is used for the overload and power calculations.	0	10000	0	A	Read Only
PNU 33024 **Monitor** ↓ ↓ **True Power Factor**	The True Power Factor (Estimated). The True Power Factor = (Displacement Power Factor x Distortion Power Factor).	0	1	0		Read Only
PNU 34688 **Monitor** ↓ ↓ **True Power P**	Total true power (Estimated). This is an addition of the 3 phases.	0	10000	0	kW	Read Only

3. Configuration and Parameters (continued)

Monitor (continued)

Menu	Description	Min	Max	Default	Unit	Reg. Type
PNU 34816 **Monitor** ↓ ↓ **Apparent Power S**	Total Apparent Power (Estimated). This is an addition of the 3 phases.	0	10000	0	kVA	Read Only
PNU 35008 **Monitor** ↓ ↓ **iERS Saving Level**	Indicates the level of potential saving. 100% indicates that Unit is saving at its maximum level. Does not indicated real percentage saving.	0	100	0	%	Read Only
PNU 22400 **Monitor** ↓ ↓ **Delay Angle**	Internal firing delay angle in Degrees. Displayed for diagnostic purposes.	0	60	0	Degrees	Read Only
PNU 23040 **Monitor** ↓ ↓ **BackStop**	The maximum possible Delay angle for the current iERS saving phase. Displayed for diagnostic purposes. May decrease during heavy load periods or instability.	0	55	0	Degrees	Read Only

3. Configuration and Parameters (continued)

Monitor (continued)

Menu	Description	Min	Max	Default	Unit	Reg. Type
PNU 22464 **Monitor** ↓ ↓ **Delay Max**	The maximum possible delay for iERS saving. Displayed for diagnostic purposes.	0	55	0	Degrees	Read Only
PNU 21320 **Monitor** ↓ ↓ **Start Saving Level**	The current in Amps at which the iERS is enabled or disabled. The iERS function is active when the motor current is less than the "Start Saving Level". When the iERS function is disabled internal bypass relays close to improve efficiency.	50% I-motor	80% I-motor	80% I-motor		Read Only
PNU 38400 **Monitor** ↓ ↓ **Last Peak Current**	Displays the peak current of the last successful start.	0	10000	0	A	Read Only
PNU 36544 **Monitor** ↓ ↓ **HeatSink Temp**	The temperature of the internal Unit heatsink. The Unit will trip when the heatsink temperature exceeds 80°C. The internal cooling fans will turn on if this temperature exceeds 40°C.	-20	80		°C or °F	Read Only

3. Configuration and Parameters (continued)

Monitor (continued)

Menu	Description	Min	Max	Default	Unit	Reg. Type
PNU 20864 **Monitor** ↓ ↓ **Reset Delay**	The amount of time remaining in the Reset Delay counter.	0	7200	0	s	Read Only
PNU 20865 **Monitor** ↓ ↓ **Reset Attempts**	The number of Reset Attempts remaining.	0	10	0		Read Only
PNU 20866 **Monitor** ↓ ↓ **Trip Free Time**	This is the amount of time remaining in the Trip Free Time counter.	0	7200	600	A	Read Only
PNU 36544 **Monitor** ↓ ↓ **Trip Event**	This is the trip that occurred just prior to the auto reset.	100	270	0		Read Only

3. Configuration and Parameters (continued)

Monitor (continued)

Menu	Description	Min	Max	Default	Unit	Reg. Type
PNU 37376 **Monitor** ↓ ↓ **Auto Reset Pending**	Indicates that the Reset Delay counter is counting down. Yes: The Auto Reset Delay is counting down. No: The Auto Reset Delay is not counting down". To map to digital output, refer to PNU11584-PNU11587.	No	Yes	No		Read Only
PNU 37568 **Monitor** ↓ ↓ **Auto Reset Exceeded**	Indicates that the maximum number of reset attempts has been reached. Yes: The number of reset attempts has exceeded the value set. No: The number of reset attempts has not exceeded the value set". To map to digital output, refer to PNU11584-PNU11587.	No	Yes	No		Read Only
PNU 20866 **Monitor** ↓ ↓ **Trip Free Time**	This is the amount of time remaining in the Trip Free Time counter.	0	7200	600	A	Read Only
PNU 36544 **Monitor** ↓ ↓ **Trip Event**	This is the trip that occurred just prior to the auto reset.	100	270	0		Read Only

3. Configuration and Parameters (continued)

Log

Menu	Description	Min	Max	Default	Unit	Reg. Type
PNU 60608 Log Trip Log ↓ Last Trip	Displays the last Fault trip.	0	65535	0		Read Only
PNU 60609 Log Trip Log ↓ Last Trip -1	Displays the last Fault trip - 1.	0	65535	0		Read Only
PNU 60611 Log Trip Log ↓ Last Trip -3	Displays the last Fault trip - 3.	0	65535	0		Read Only
PNU 60612 Log Trip Log ↓ Last Trip -4	Displays the last Fault trip – 4.	0	65535	0		Read Only

3. Configuration and Parameters (continued)

Log (continued)

Menu	Description	Min	Max	Default	Unit	Reg. Type
PNU 60614 **Log** **Trip Log** ↓ **Last Trip -6**	Displays the last Fault trip – 6.	0	65535	0		Read Only
PNU 60615 **Log** **Trip Log** ↓ **Last Trip -7**	Displays the last Fault trip – 7.	0	65535	0		Read Only
PNU 60617 **Log** **Trip Log** ↓ **Last Trip -9**	Displays the last Fault trip -9.	0	65535	0		Read Only
PNU - **Log** **Trip Log** **Trip Code Descriptions** **101** **Input Side Phase Loss**	Phase L1 missing at the instant of start up. The L1 phase is either missing or at a very low level. Check all incoming connections. If a main contactor is being controlled by a digital output set to "Running", check contactor delay is sufficient.					Read Only

3. Configuration and Parameters (continued)

Log (continued)

Menu	Description	Min	Max	Default	Unit	Reg. Type
PNU - **Log** **Trip Log** **Trip Code Descriptions** **102** **Input Side Phase Loss**	Phase L2 missing at the instant of start up. The L2 phase is either missing or at a very low level. Check all incoming connections. If a main contactor is being controlled by a digital output set to "Running", check contactor delay is sufficient.					Read Only
PNU - **Log** **Trip Log** **Trip Code Descriptions** **103** **Input Side Phase Loss**	Phase L3 missing at the instant of start up. The L3 phase is either missing or at a very low level. Check all incoming connections. If a main contactor is being controlled by a digital output set to "Running" check contactor delay is sufficient.					Read Only
PNU - **Log** **Trip Log** **Trip Code Descriptions** **104 – 117** **Input Side Phase Loss**	Any or all phases missing when the motor is being controlled. L1 L2 or L3 phase are missing or at a very low level. Check all incoming connections. Check any fuses/breakers incorporated in the power circuit.					Read Only
PNU - **Log** **Trip Log** **Trip Code Descriptions** **201** **Max. Temp. Exceeded**	Internal heatsink temperature has exceeded 90°C. It is possible the Unit is operating outside specified limits. Check enclosure ventilation and airflow around the Unit. If the unit trips immediately the internal temperature sensor could be faulty.					Read Only

3. Configuration and Parameters (continued)

Log (continued)

Menu	Description	Min	Max	Default	Unit	Reg. Type
PNU - **Log** **Trip Log** **Trip Code Descriptions** **208** **Thermal Sensor Trip**	Thermal sensor Failure. The internal temperature sensor has failed. Contact the supplier.					Read Only
PNU - **Log** **Trip Log** **Trip Code Descriptions** **301-308** **Thyristor Firing Trip**	One or more of the internal control thyristors (SCRs) have failed to turn on properly. (In-Line "Firing Mode"). The Unit has detected that the SCRs are not operating as expected. Check all incoming and outgoing connections.					Read Only
PNU - **Log** **Trip Log** **Trip Code Descriptions** **350-358** **Thyristor Firing Trip**	One or more of the internal control thyristors (SCRs) have failed to turn on properly. (Delta "Firing Mode"). The Unit has detected that the SCRs are not operating as expected. Check all incoming and outgoing connections.					Read Only

3. Configuration and Parameters (continued)

Log (continued)

Menu	Description	Min	Max	Default	Unit	Reg. Type
PNU - Log Trip Log Trip Code Descriptions 401 Motor Side Phase Loss	One or all of the phases are missing on the motor side during the instant of start up. T1 T2 or T3 phase are missing or at a very low level. Check that the motor is connected to T1 T2 and T3. Ensure any disconnecting device between the Unit and the motor is closed at the instant of start.					Read Only
PNU - Log Trip Log Trip Code Descriptions 402-403 Motor Side Phase Loss	One or all of the phases are missing on the motor side during the instant of start up when the motor being controlled. T1 T2 or T3 phase are missing or at a very low level. Check all incoming and outgoing connections.					Read Only
PNU - Log Trip Log Trip Code Descriptions 601 Control Voltage Too Low	The internal control supply of the Unit level has fallen to a low level. Can be caused by a weak 24Vdc control supply. Ensure 24Vdc supply meets the requirements specified in the Quick Start Guide.					Read Only
PNU - Log Trip Log Trip Code Descriptions 701-710 Sensing Fault Trip	One or more of the internal control thyristors (SCRs) have failed to turn on properly. The Unit has detected that the SCRs are not operating as expected. Check connections all incoming and outgoing connections.					Read Only

Blank Page

3. Configuration and Parameters (continued)

Log (continued)

Menu	Description	Min	Max	Default	Unit	Reg. Type
PNU - **Log** **Trip Log** **Trip Code Descriptions** **801-802** **Fan Problem**	One or more of the internal cooling fans has failed. To ensure the heatsink is cooled sufficiently the Unit Will trip if the fans fail to operate. Check Unit fans for signs of damage or contamination.					Read Only
PNU - **Log** **Trip Log** **Trip Code Descriptions** **1001** **Short Circuit Thyristor**	One or more of the internal control thyristors (SCRs) have failed short circuit. The Unit has detected that the SCRs are not operating as expected. ISOLATE SUPPLY + MOTOR Disconnect supply. Check by measuring the resistance between L1-T1 L2-T2 L3-T3 (Anything < 10R is assumed short circuit).					Read Only
PNU - **Log** **Trip Log** **Trip Code Descriptions** **1101** **Low Current Trip**	The motor current has been lower than the low trip level for the low trip time. This trip is not active during soft start and soft stop and is "off" by default. If the low current trip is not required turn "off" in "Trip Settings".					Read Only

3. Configuration and Parameters (continued)

Log (continued)

Menu	Description	Min	Max	Default	Unit	Reg. Type
PNU - **Log** **Trip Log** **Trip Code Descriptions** **1201** **Current Limit Timeout Trip**	The motor has been held in current limit longer than the "Start current limit Time". It is likely that the current limit level has been set too low for the application. Increase the current limit level or timeout period.					Read Only
PNU - **Log** **Trip Log** **Trip Code Descriptions** **1202** **Current Limit Timeout Trip**	The motor has been held in current limit longer than the "Stop current limit Time". It is likely that the current limit level has been set too low for the application. Increase the current limit level or timeout period.					Read Only
PNU - **Log** **Trip Log** **Trip Code Descriptions** **1301** **Overload Trip**	The "Overload" has exceeded 100%. The Unit is attempting to start an application that is outside its capacity or it is starting too often. Refer to the overload trip curves to determine whether the Unit has been sized correctly.					Read Only

3. Configuration and Parameters (continued)

Log (continued)

Menu	Description	Min	Max	Default	Unit	Reg. Type
PNU - **Log** **Trip Log** **Trip Code Descriptions** **1302** **Overload Trip**	The motor current has exceeded 475% (i-Unit) for a time greater than 250ms. The Unit is attempting to start an application that is outside its capacity with a "high current limit level" set. Refer to the overload trip curves to determine whether the Unit has been sized correctly and check current limit level.					Read Only
PNU - **Log** **Trip Log** **Trip Code Descriptions** **1401** **Shearpin Trip**	The motor current has been higher than the "Shearpin Trip Level" for the trip time. This trip is not active during soft start and soft stop and is "off" by default. If Shearpin trip is not required turn "off" in "Trip Settings".					Read Only
PNU - **Log** **Trip Log** **Trip Code Descriptions** **1501** **PTC Thermistor Trip**	The PTC thermistor value has exceeded the trip level. The PTC thermistor connected to the PTC input has exceeded it response temperature or the PTC input is open circuit. If the PTC TRIP is not required turn "off" in "Trip Settings".					Read Only

3. Configuration and Parameters (continued)

Log (continued)

Menu	Description	Min	Max	Default	Unit	Reg. Type
PNU - **Log** **Trip Log** **Trip Code Descriptions** **1601** **External Trip**	External Trip. The input programmed to External Trip is active. If the External trip is not required turn "off" in "Trip settings.					Read Only
PNU - **Log** **Trip Log** **Trip Code Descriptions** **1701** **Communications Trip**	Communications failure. The command or status PNU has not been polled in the time set in the "Timeout" period. If the communication trip is disabled, the Unit cannot be stopped in the communications fail.					Read Only
PNU - **Log** **Trip Log** **Trip Code Descriptions** **1801-1802** **Bypass Relay Trip**	One or more of the internal bypass relays has failed to close. The internal bypass relay has failed, or the control supply is too weak. Ensure 24Vdc supply meets the requirements specified in the Quick Start Guide.					Read Only
PNU - **Log** **Trip Log** **Trip Code Descriptions** **1803** **Bypass Relay Trip**	One or more of the internal bypass relays has failed to open. The internal bypass relay has failed, or the control supply is too weak. Ensure 24Vdc supply meets the requirements specified in the Quick Start Guide.					Read Only

3. Configuration and Parameters (continued)

Log (continued)

Menu	Description	Min	Max	Default	Unit	Reg. Type
PNU - **Log** **Trip Log** **Trip Code Descriptions** **1901** **Cover Open, Close to Enable Motor Start**	The Unit cover is open. The cover is open or not closed properly. Close Cover or if Cover trip is not required turn off in "Trip Settings".					Read Only
PNU - **Log** **Trip Log** **Trip Code Descriptions** **2001-2003** **Remote Start is Enabled**	The remote start signal is active. The remote start signal was active during power up or Reset or Parameter Load. Turn off remote or if Remote On trip is not required turn "off" in "Trip Settings".					Read Only
PNU - **Log** **Trip Log** **Trip Code Descriptions** **2101** **Rotation L1 L2 L3 Trip**	The input phase rotation is RYB (L1-L2-L3). The phase rotation is opposite to that required. Change phase rotation or if "RYB" trip is not required turn "off" in trip settings.					Read Only
PNU - **Log** **Trip Log** **Trip Code Descriptions** **2102** **Rotation L1 L3 L2 Trip**	The input phase rotation is RBY (L1-L3-L2). The phase rotation is opposite to that required. Change phase rotation or if "RBY" trip is not required turn "off" in trip settings.					Read Only

3. Configuration and Parameters (continued)

Log (continued)

Menu	Description	Min	Max	Default	Unit	Reg. Type
PNU - Log Trip Log Trip Code Descriptions 2201-2299 2701-2799 MPU Trip	Internal Unit Failure. The Unit has failed internally and is unable to recover automatically. Cycle the control supply. If the fault is not cleared, then contact the supplier.					Read Only
PNU - Log Trip Log Trip Code Descriptions 2301-2303 Current Sensor Trip	Current sensor failure. One or more of the internal sensors used to measure current has failed or is reading a low value. Check the connections to the supply and motor as disconnection will result in a zero current reading. Check the plate FLA of the motor being controlled is at least 25% of the "i-motor" rating.					Read Only
PNU - Log Trip Log Trip Code Descriptions 2401-2499 Operation 3 Trip	Fail Safe operation. A process associated with the Control Board has been affected and is unable to recover automatically. The trip MUST be reset by either the digital input or keypad or the bus command depending on the control method set. This trip is a special case and it is NOT possible to reset this trip by cycling the control supply.					Read Only

3. Configuration and Parameters (continued)

Log (continued)

Menu	Description	Min	Max	Default	Unit	Reg. Type
PNU - **Log** **Trip Log** **Trip Code Descriptions** **2501-2599** **Operation 1 Trip**	Fail Safe operation. A process associated with the Keypad board has been affected and is unable to recover automatically. The trip can be reset by either the digital input or keypad or the bus command depending on the control method set. It is also possible to reset this trip by cycling the control supply.					Read Only

Continued overleaf

3. Configuration and Parameters (continued)

Log (continued)

Menu	Description	Min	Max	Default	Unit	Reg. Type
PNU - Log Trip Log Trip Code Descriptions 2601-2699 Operation 2 Trip	Fail Safe operation. A process associated with the Logging function has been affected and is unable to recover automatically. The trip can be reset by either the digital input or keypad or the bus command depending on the control method set. It is also possible to reset this trip by cycling the control supply.					Read Only
PNU 38400 Log Trip Log ↓ Last Peak Current	Displays the peak current of the last successful start.	0	10000	0	A	Read Only
PNU 38402 Log Trip Log ↓ Last peak start current -1	Displays the peak current of the last successful start -1.	0	10000	0	A	Read Only
PNU 38404 Log Trip Log ↓ Last peak start current -2	Displays the peak current of the last successful start -2.	0	10000	0	A	Read Only

3. Configuration and Parameters (continued)

Log (continued)

Menu	Description	Min	Max	Default	Unit	Reg. Type
PNU 38406 **Log** **Trip Log** ↓ **Last peak start current -3**	Displays the peak current of the last successful start -3.	0	10000	0	A	Read Only
PNU 38408 **Log** **Trip Log** ↓ **Last peak start current -4**	Displays the peak current of the last successful start -4.	0	10000	0	A	Read Only
PNU 38410 **Log** **Trip Log** ↓ **Last peak start current -5**	Displays the peak current of the last successful start -5.	0	10000	0	A	Read Only
PNU 38414 **Log** **Trip Log** ↓ **Last peak start current -7**	Displays the peak current of the last successful start -7.	0	10000	0	A	Read Only

3. Configuration and Parameters (continued)

Log (continued)

Menu	Description	Min	Max	Default	Unit	Reg. Type
PNU 38416 **Log** **Trip Log** ↓ **Last peak start current -8**	Displays the peak current of the last successful start -8.	0	10000	0	A	Read Only
PNU 38418 **Log** **Trip Log** ↓ **Last peak start current -9**	Displays the peak current of the last successful start -9.	0	10000	0	A	Read Only
PNU 39040 **Log** **Trip Log** ↓ **Last peak stop current**	Displays the peak current of the last successful stop.	0	10000	0	A	Read Only
PNU 39044 **Log** **Trip Log** ↓ **Last peak stop current -2**	Displays the peak current of the last successful stop -2.	0	10000	0	A	Read Only

3. Configuration and Parameters (continued)

Log (continued)

Menu	Description	Min	Max	Default	Unit	Reg. Type
PNU 39046 **Log** **Trip Log** ↓ **Last peak stop current -3**	Displays the peak current of the last successful stop -3.	0	10000	0	A	Read Only
PNU 39048 **Log** **Trip Log** ↓ **Last peak stop current -4**	Displays the peak current of the last successful stop -4.	0	10000	0	A	Read Only
PNU 39050 **Log** **Trip Log** ↓ **Last peak stop current -5**	Displays the peak current of the last successful stop -5.	0	10000	0	A	Read Only
PNU 39054 **Log** **Trip Log** ↓ **Last peak stop current -7**	Displays the peak current of the last successful stop -7.	0	10000	0	A	Read Only

3. Configuration and Parameters (continued)

Log (continued)

Menu	Description	Min	Max	Default	Unit	Reg. Type
PNU 39056 **Log** **Trip Log** ↓ **Last peak stop current -8**	Displays the peak current of the last successful stop -8.	0	10000	0	A	Read Only
PNU 39058 **Log** **Trip Log** ↓ **Last peak stop current -9**	Displays the peak current of the last successful stop -9.	0	10000	0	A	Read Only
PNU 39680 **Log** **Trip Log** ↓ **Last temperature**	Displays the heatsink temperature at the end of the last successful start.	-20	80		°C	Read Only
PNU 39682 **Log** **Trip Log** ↓ **Last temperature -2**	Displays the heatsink temperature at the end of the last successful start -2.	-20	80		°C	Read Only

3. Configuration and Parameters (continued)

Log (continued)

Menu	Description	Min	Max	Default	Unit	Reg. Type
PNU 39683 **Log** **Trip Log** ↓ **Last temperature -3**	Displays the heatsink temperature at the end of the last successful start-3.	-20	80		°C	Read Only
PNU 39684 **Log** **Trip Log** ↓ **Last temperature -4**	Displays the heatsink temperature at the end of the last successful start-4.	-20	80		°C	Read Only
PNU 39685 **Log** **Trip Log** ↓ **Last temperature -5**	Displays the heatsink temperature at the end of the last successful start-5.	-20	80		°C	Read Only
PNU 39686 **Log** **Trip Log** ↓ **Last temperature -6**	Displays the heatsink temperature at the end of the last successful start-6.	-20	80		°C	Read Only

3. Configuration and Parameters (continued)

Log (continued)

Menu	Description	Min	Max	Default	Unit	Reg. Type
PNU 39688 **Log** **Trip Log** ↓ **Last temperature -8**	Displays the heatsink temperature at the end of the last successful start-8.	-20	80		°C	Read Only
PNU 39689 **Log** **Trip Log** ↓ **Last temperature -9**	Displays the heatsink temperature at the end of the last successful start-9.	-20	80		°C	Read Only
PNU 40320 **Log** **Trip Log** ↓ **Last overload**	Displays the overload level at the end of the last successful start.	0	100	0	%	Read Only
PNU 40321 **Log** **Trip Log** ↓ **Last overload-1**	Displays the overload level at the end of the last successful start -1.	0	100	0	%	Read Only

3. Configuration and Parameters (continued)

Log (continued)

Menu	Description	Min	Max	Default	Unit	Reg. Type
PNU 40323 **Log** **Trip Log** ↓ **Last overload-3**	Displays the overload level at the end of the last successful start -3.	0	100	0	%	Read Only
PNU 40324 **Log** **Trip Log** ↓ **Last overload-4**	Displays the overload level at the end of the last successful start -4.	0	100	0	%	Read Only
PNU 40325 **Log** **Trip Log** ↓ **Last overload-5**	Displays the overload level at the end of the last successful start -5.	0	100	0	%	Read Only
PNU 40326 **Log** **Trip Log** ↓ **Last overload-6**	Displays the overload level at the end of the last successful start -6.	0	100	0	%	Read Only

Blank Page

3. Configuration and Parameters (continued)

Device

Menu	Description	Min	Max	Default	Unit	Reg. Type
PNU 40328 Log Trip Log ↓ Last overload-8	Displays the overload level at the end of the last successful start -8.	0	100	0	%	Read Only
PNU 40329 Log Trip Log ↓ Last overload-9	Displays the overload level at the end of the last successful start -9.	0	100	0	%	Read Only
PNU 35840 Log Totals Log ↓ Number of Starts	The total number of successful starts.	0	4294836225	0		Read Only
PNU 35904 Log Totals Log ↓ Motor Running Time	The total time the motor has been running.	0	4294836225	0	s	Read Only

3. Configuration and Parameters (continued)

Device (continued)

Menu	Description	Min	Max	Default	Unit	Reg. Type
PNU 35906 **Log** **Totals Log** ↓ **Control Supply On Time**	The total time the Unit has been powered up.	0	4294836225	0	s	Read Only
PNU - **Log** ↓ ↓ **Download Log File**	Download the full log file on to the USB stick. The Unit logs several parameters during normal and fault conditions. Data is stored in CSV format. Please send all downloaded files to Motortronics UK on request.					Read/Write
PNU 62081 **Log** ↓ ↓ **Clear Trip Log**	Deletes all of the history in the Trip Log.	No	Yes	No		Read/Write

3. Configuration and Parameters (continued)

Device (continued)

Menu	Description	Min	Max	Default	Unit	Reg. Type
PNU 40328 **Log** **Trip Log** ↓ **Last overload-8**	Displays the overload level at the end of the last successful start -8.	0	100	0	%	Read Only
PNU - **Device** ↓ ↓ **Date**	Enter current date. Date format can be set to either dd/mm/yyyy or mm/dd/yyyy. Refer to "Date format" parameter.					Read/Write
PNU 14720 **Device** ↓ ↓ **Time**	Allows the time to be changed to 'local' time. By default, the time is set to GMT.	-	-	GMT time	hh:mm:ss	Read/Write
PNU 13376 **Device** ↓ ↓ **Language**	Selects the display language for the keypad. Enter the required language from the displayed list.	English	End of list	English		Read/Write

3. Configuration and Parameters (continued)

Device (continued)

Menu	Description	Min	Max	Default	Unit	Reg. Type
PNU 12864 **Device** ↓ ↓ **Passcode**	Stops unauthorised access to read/ write parameters. For the passcode be active the "Screen lock" must be turned on.	0	Max Value	0		Read/Write
PNU 16000 **Device** **Networks** **Modbus Network Settings** **Address**	Sets the Modbus station number.	1	32	1		Read/Write
PNU 16064 **Device** **Networks** **Modbus Network Settings** **Baud Rate**	Sets the serial communications baud rate. The available baud rates are 9600 19200 38400 57600 or 115200.	9600	115200	19200		Read/Write
PNU 16128 **Device** **Networks** **Modbus Network Settings** **Parity**	Sets the serial communications parity bit. The available parity options are None Even Odd. Also sets the stop bits. No parity uses 2 stop bits. Odd or even parity uses 1 stop bit.	None	Odd	Even		Read/Write

3. Configuration and Parameters (continued)

Device (continued)

Menu	Description	Min	Max	Default	Unit	Reg. Type
PNU 14080 **Device** **Networks** **Modbus Network Settings** **Traffic LEDS**	Allows the user to check the state of the modbus communication network. Red LED receive. Green LED Transmit. On: The Red and Green LEDS display the traffic on the Modbus communications network. Off: The Red and Green LEDs display the Unit status information.	Off	On	Off		Read/Write
PNU - **Device** **Networks** ↓ **Anybus**	Anybus expansion module. Only active with Anybus module fitted.					Read/Write
PNU 15808 **Device** **Networks** ↓ **Timeout ms**	Communications trip Timeout period. To prevent a 'Communications Trip' (If enabled) the bus must be kept active. To keep the bus active there must be at least one Modbus read or write (any PNU) during the "Timeout ms" period.	0	60000	5000	ms	Read/Write
PNU 53802 **Device** **Networks** ↓ **Communications Shutdown**	This works in conjunction with the 'Communications Trip'. On: If the 'Communication Trip' is turned 'On' the unit will shut down instead of tripping if the communications fail. Off: If the 'Communication Trip' is turned 'On' the unit will trip if the communications fail.	Off	On	Off		Read/Write

3. Configuration and Parameters (continued)

Device (continued)

Menu	Description	Min	Max	Default	Unit	Reg. Type
PNU 62080 **Device** ↓ ↓ **Reset Defaults**	Restores the Unit to the factory defaults.	No	Yes	No		Read/Write
PNU 100003 **Device** ↓ ↓ **About**	Gives the Model number. Serial Number and current software versions. The software versions are SGY1xxxxxx SGY2xxxxxx and SGY3xxxxxx.					Read Only
PNU 12992 **Device** ↓ ↓ **Screen Lock**	Stops unauthorised access to read/ write parameters.	Off	On	Off		Read/Write

3. Configuration and Parameters (continued)

Device (continued)

Menu	Description	Min	Max	Default	Unit	Reg. Type
PNU 13248 **Device** ↓ ↓ **Date Format**	Allows the date format to be changed dd/mm/yyyy or mm/dd/yyyy.	dd/mm/yyyy	mm/dd/yyyy	dd/mm/yyyy		Read/Write
PNU 13312 **Device** ↓ ↓ **Temperature Format**	Selects °C or °F for displayed temperatures. °C: All displayed temperatures are °C. °F: All displayed temperatures are °F.	°C	°F	°C		Read/Write
PNU 62272 **Device** ↓ ↓ **Parameters to USB**	Allows the user to save parameters. Downloads the parameters from the Unit to the USB drive. Data is stored in CSV format.	No	Yes	No		Read/Write
PNU 62336 **Device** ↓ ↓ **Parameters from USB**	Allows the user to load parameters stored on a USB flash drive. Uploads the parameters from the USB drive to the Unit. Data is stored in CSV format.	No	Yes	No		Read/Write

3. Configuration and Parameters (continued)

Device (continued)

Menu	Description	Min	Max	Default	Unit	Reg. Type
PNU 13120 **Device** ↓ ↓ **Service Code**	Diagnostic parameter. For Motortronics UK use only.					

Saving and Loading a VMX-synergy™ Configuration File

The operating parameters of the unit can be copied onto a USB flash drive. To do this, attach the USB flash drive into the USB port under the front cover just above the touchscreen.

From the Device Setting menu on VMX-synergy™ Home screen, scroll down to the third menu and select "Parameters to USB." This will create a file called PARAMS.CSV, and copy it to a PARAM folder on the stick. There is no way to rename the file during the save process. If you have another PARAMS.CSV file on the flash drive, it will be overwritten. It is suggested that parameter files be archived in a separate folder with a unique name other than PARAM. A new parameter configuration must be configured on VMX-synergy™ and saved using the method described above. It is not recommended to open the .CSV file and edit parameters on a PC and resave the PARAMS file.

There is also the option to copy "Parameters From USB," which gives the ability to restore or set parameters to a known state (on the same or another VMX-synergy™ unit). This function will only work on a file called PARAMS.CSV in the PARAM folder of the stick. Any other files in that folder will be ignored.

Saving a Log file

A log file may be used to help solve performance issues that may arise. You may be asked to download this by your supplier.

From the Log menu on the Home screen, scroll down to the second menu and select "Download Log File." The LOG folder is created when the user connects a flash drive and selects "Download Log file" from the LOG menu. As an aid to help analyses, the log file(s) [Unit Serial Number].CSV is also created and copied into the LOG folder.

Part number USB-KEY is a USB flash drive that has been verified to work with VMX-synergy™. Other flash drives may not physically fit or may not perform correctly.

3. Configuration and Parameters (continued)

Functional Summaries

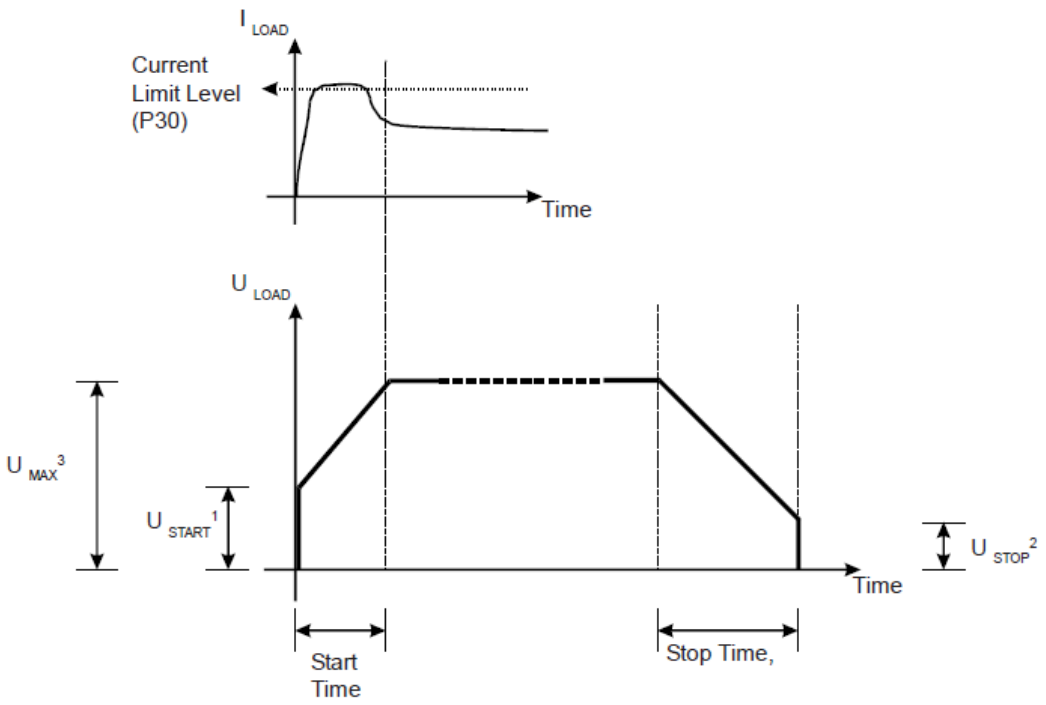

Figure 1: 'Basic' Functions
(continued overleaf)

3. Configuration and Parameters (continued)

Functional Summaries (continued)

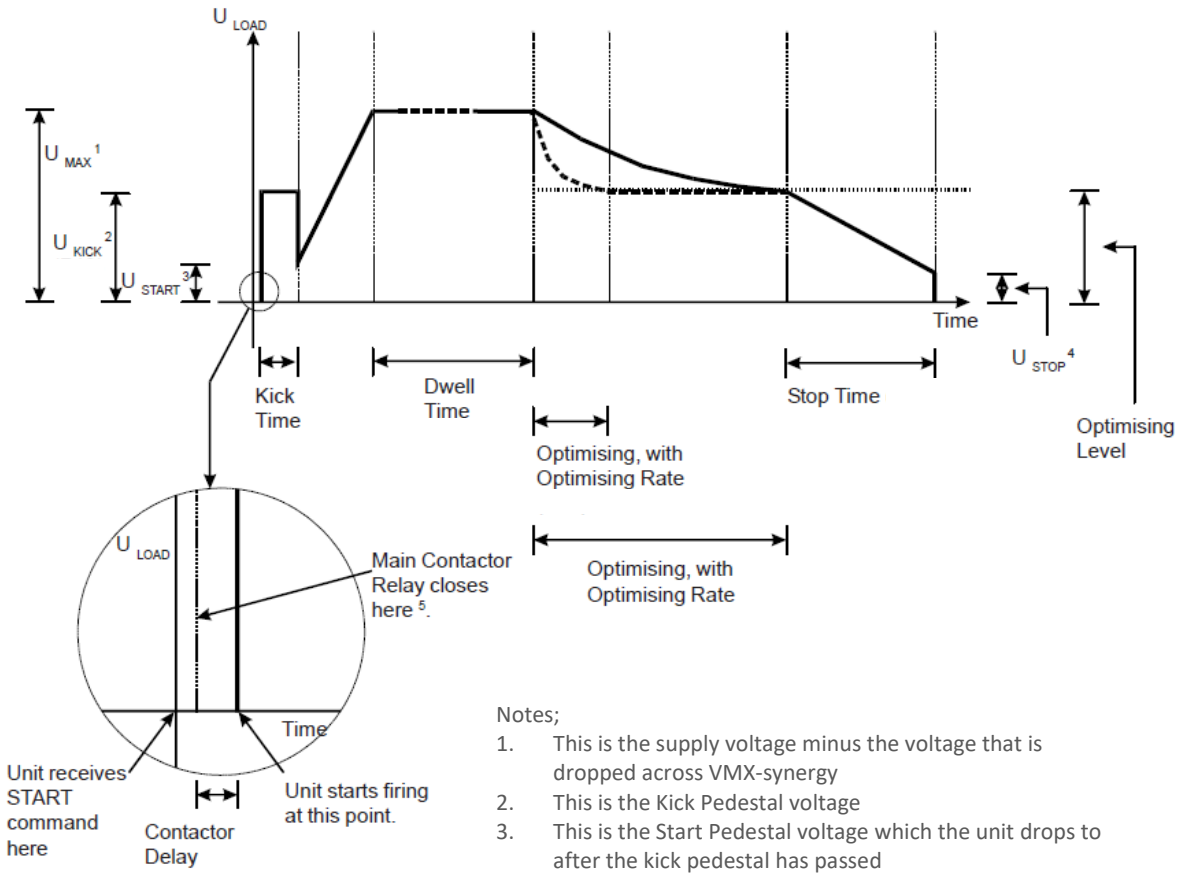

Notes;

1. This is the supply voltage minus the voltage that is dropped across VMX-synergy
2. This is the Kick Pedestal voltage
3. This is the Start Pedestal voltage which the unit drops to after the kick pedestal has passed
4. This is the Stop Pedestal voltage which can be set to values lower than 40% of U MAX if Low Volts Stop is on
5. This relay brings in the contactor that supplies the three phase AC mains to the unit in the standard wiring configuration (see Electrical Installation section 2.1)
6. Represented by the thick dotted line
7. Represented by the thick unbroken line

Figure 2: 'Advanced' Functions
(continued overleaf)

3. Configuration and Parameters (continued)

Functional Summaries (continued)

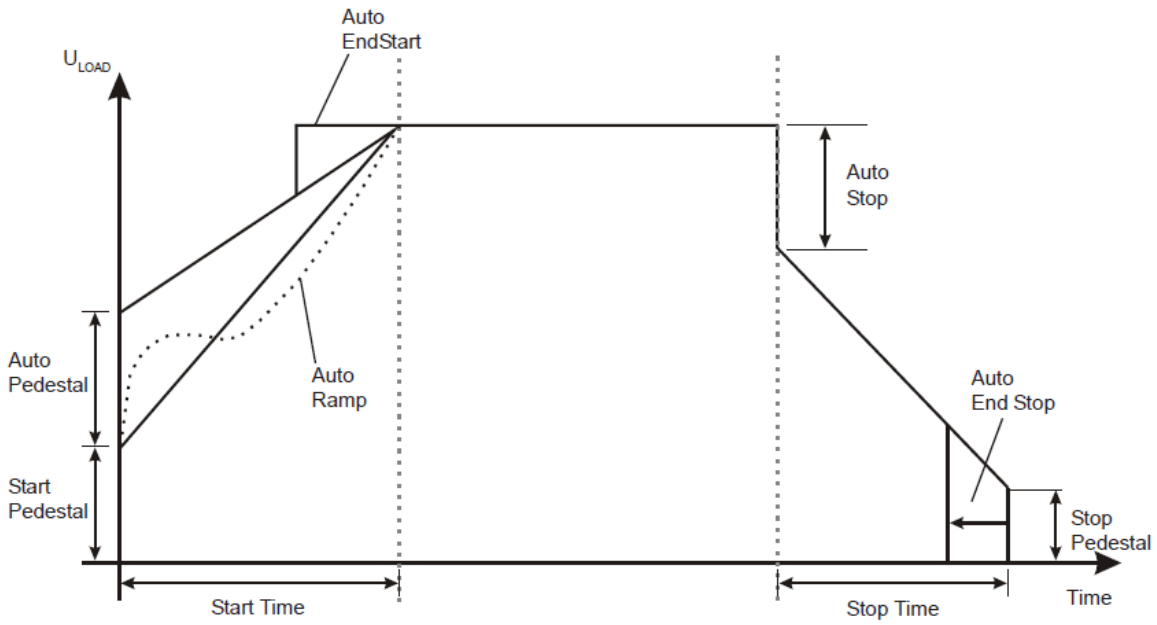

Figure 3: 'Auto' Functions

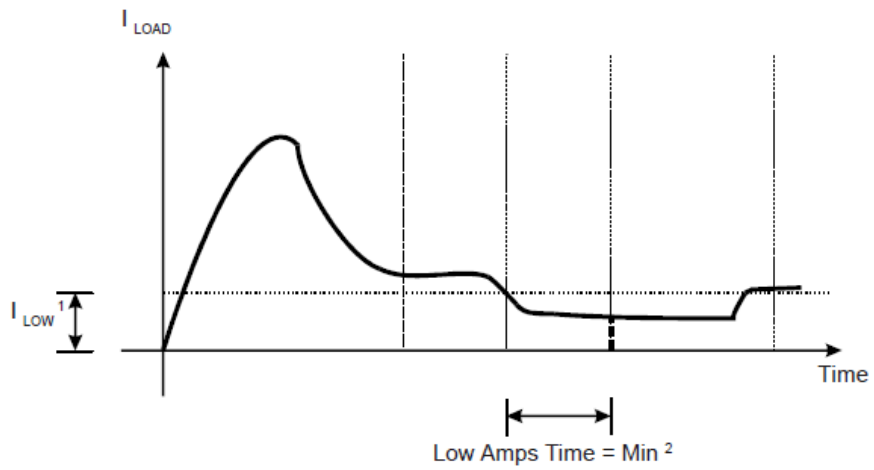

Notes

1. I_{LOW} = Low Amps Level.
2. If I_{LOAD} drops below 'Low Amps Level' and 'Low Current' is set to 'on', and 'Low Amps Time' is set to minimum then the unit will trip as indicated by the short thick dotted line.
3. If 'Low Amps Time' is set to maximum and I_{LOAD} rises above 'Low Amps Level' before 'Low Amps Time' has elapsed then the unit will not trip.

Figure 4: Low Current Protection Function

3. Configuration and Parameters (continued)

Functional Summaries (continued)

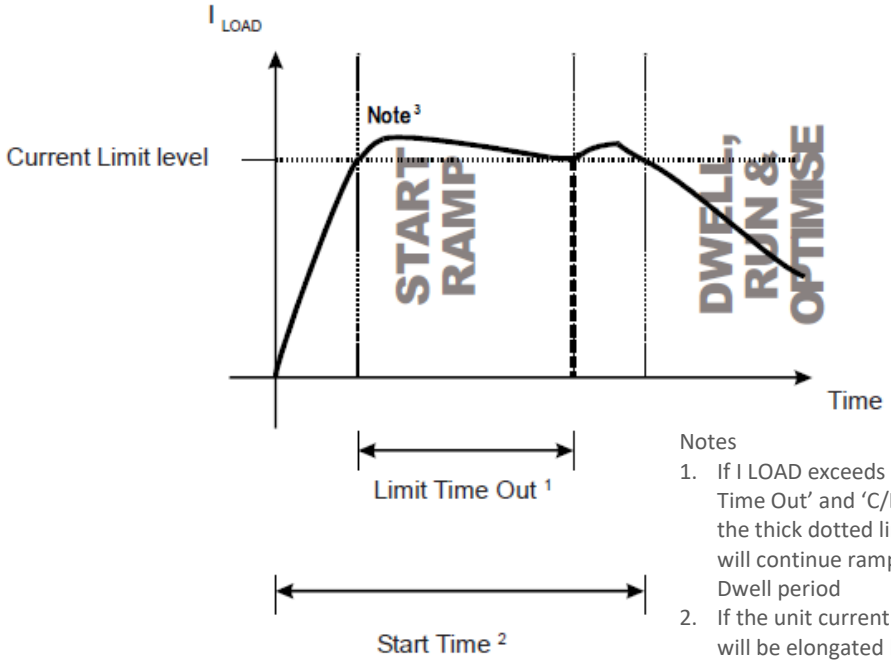

Figure 5: Current Limit Function

Notes

1. If I LOAD exceeds 'Current Limit Level' for time 'Limit Time Out' and 'C/L Time Out' is on, the unit will trip at the thick dotted line. If 'C/L Time Out' is off the unit will continue ramping until T.O.R. and then enter the Dwell period
2. If the unit current limits during start-up the start time will be elongated by the amount of time that the unit was current limiting
3. The actual current rises slightly above the level set in 'Current Limit' because the unit manages the current through control of the thyristor firing delay angle

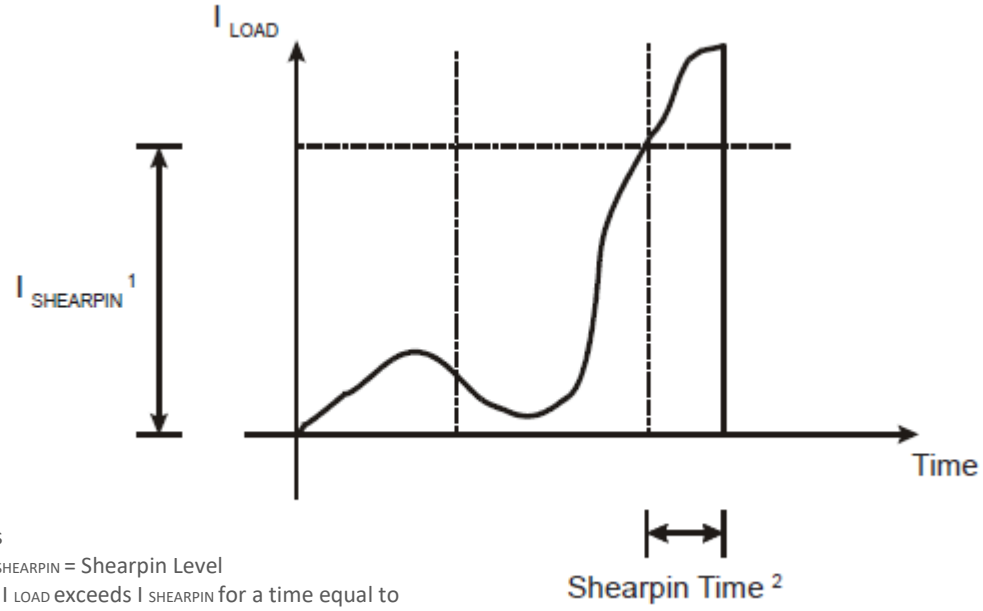

Notes

1. I SHEARPIN = Shearpin Level
2. If I LOAD exceeds I SHEARPIN for a time equal to 'Shearpin Time', and 'Shearpin' is set to 'on', then the unit will trip as indicated

Figure 6: Shearpin Function

Blank Page

4. Communication

Modbus RTU Serial Communications

For Modbus RTU parameter tables see MAN-SGY-012

Modbus RTU Communications Interface

All VMX-synergy™ soft starts support Modbus RTU as standard. The RS-485 communications are accessible from the RJ12 connector (see below).

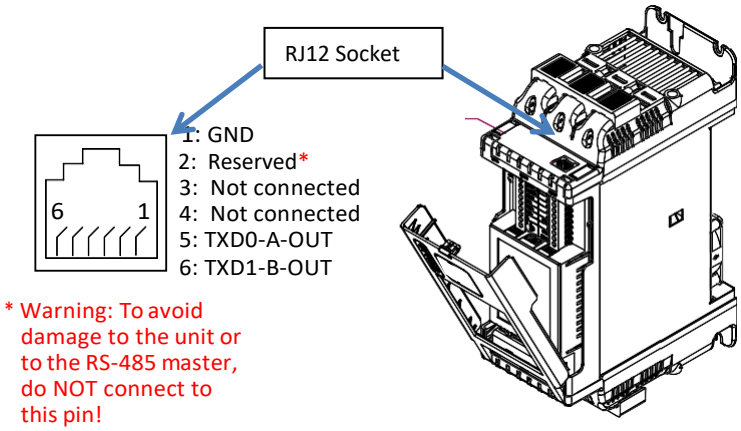

Modbus RTU Connections

Single VMX-synergy™ RS-485 network

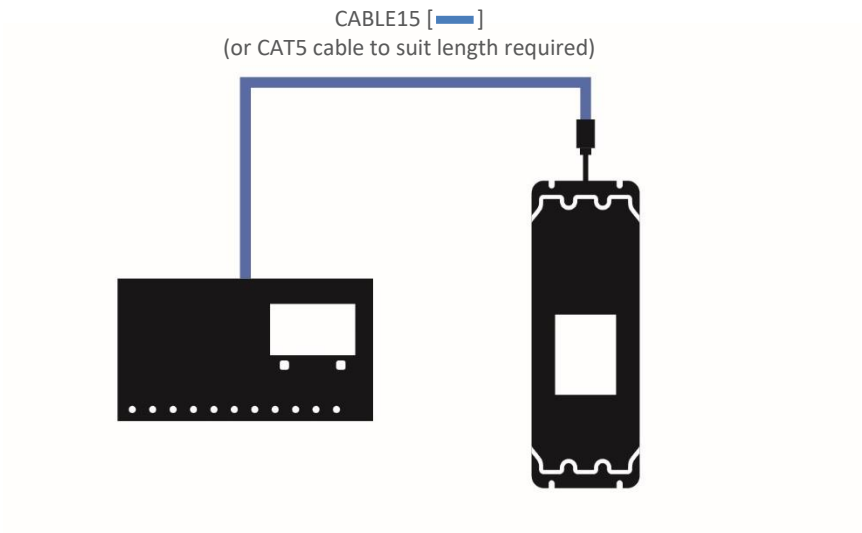

4. Communication (continued)

Multiple VMX-synergy™ RS-485 network

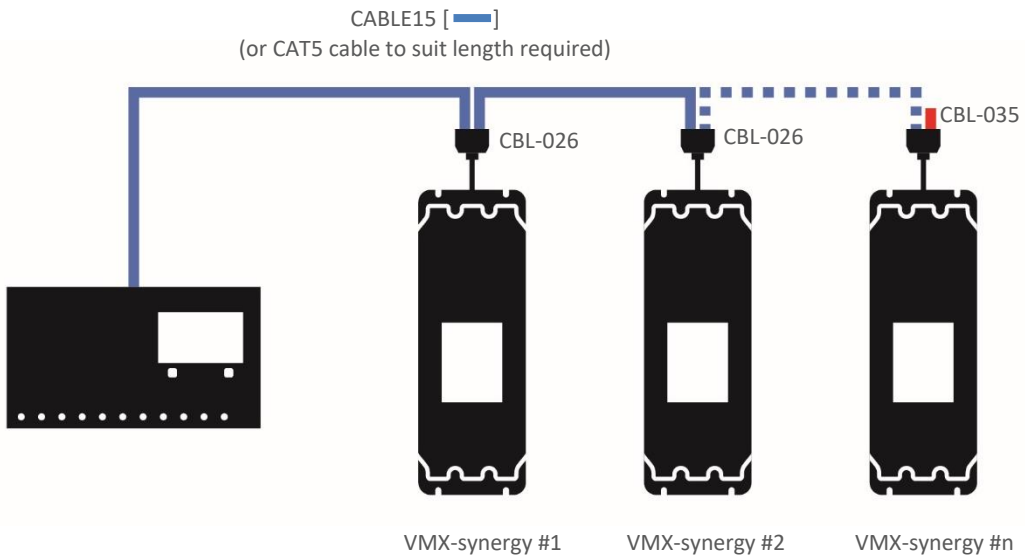

Modbus Communications Configuration

The Modbus communication settings may be configured from the Device menu:

- Device >> Networks >> Modbus Network Settings >> Address (1 –32)
- Device >> Networks >> Modbus Network Settings >> Baud (9600 –115200)
- Device >> Networks >> Modbus Network Settings >> Parity (Odd/Even)
- (Data bits = 8, Stop bits = 1)

The communication parameters should be set before connecting the Modbus master.

Transmission Modes

ASCII and RTU transmission modes are defined in the Modbus protocol specification. VMX-synergy™ uses *only the RTU mode* for the message transmission.

4. Communication (continued)

Message Structure for RTU Mode

The Modbus RTU structure uses a master-slave system for message exchange. In the case of the VMX-synergy™ system, it allows up to 32 slaves, and one master. Every message begins with the master making a request to a slave, which responds to the master in a defined structure. In both messages (request and answer), the used structure is the same:

- Address, Function Code, Data and CRC.

Master (request message):

Address (1 byte)	Function (1 byte)	Request Data (n bytes)	CRC (2 bytes)

Slave (response message):

Address (1 byte)	Function (1 byte)	Response Data (n bytes)	CRC (2 bytes)

Address

The master initiates the communication by sending a byte with the address of the destination slave. When responding, the slave also initiates the message with its own address. Broadcast to address 0 (zero) is not supported.

Function Code

This field contains a single byte, where the master specifies the type of service or function requested to the slave (reading, writing, etc.). According to the protocol, each function is used to access a specific type of data.

Data Field

The format and contents of this field depend on the function used and the transmitted value.

CRC

The used method is the CRC-16 (Cyclic Redundancy Check). This field is formed by two bytes; where first the least significant byte is transmitted (CRC-), and then the most significant (CRC+). The CRC calculation form is described in the Modbus RTU protocol specification.

Supported Functions

Modbus RTU specification defines the functions used to access different types of data.

- VMX-synergy™ parameters are defined as *holding type registers*.
- For Modbus RTU/TCP Client devices that use Modicon style addressing, place a 4 as the high digit followed by the Modbus address defined in the parameter mapping table. Note that VMX-synergy™ Modbus addressing starts at zero; not 1 as some devices do.
- VMX-synergy™ 32-bit parameters are High Word/Low Word in Modbus format.

4. Communication (continued)

Supported Functions (continued)

The following services are available:

Read Holding Registers

Description: reading register blocks of holding register type (block R/W limited to 8 registers).

- Function code: 03

Modbus Function 03 Transaction Table			
Query		*Response*	
Field	*Hex Byte*	*Field*	*Hex Byte*
Slave address	01	Slave address	01
Function	03	Function	03
Start address Hi	00	Byte count	02
Start address Lo	01	Data Hi	01
No of registers Hi	00	Data Lo	2C
No of registers Lo	01	CRC Lo	B8
CRC Lo	D5	CRC Hi	09
CRC Hi	CA		

Write Single Register

Description: writing in a single register of the holding type.

- Function code: 06

Modbus Function 06 Transaction Table			
Query		*Response*	
Field	*Hex Byte*	*Field*	*Hex Byte*
Slave address	01	Slave address	01
Function	06	Function	06
Address Hi	00	Address Hi	02
Address Lo	0C	Address Lo	0C
Force data Hi	00	Force data Hi	00
Force data Lo	09	Force data Lo	09
CRC Lo	48	CRC Lo	88
CRC Hi	0C	CRC Hi	77

4. Communication (continued)

Supported Functions (continued)

Write Multiple Registers

Description: writing register blocks of holding register type (block R/W limited to 8 registers).

- Function code: 16

Modbus Function 16 Transaction Table			
Query		*Response*	
Field	*Hex Byte*	*Field*	*Hex Byte*
Slave address	01	Slave address	01
Function	16	Function	16
Address Hi	00	Address Hi	02
Address Lo	0C	Address Lo	0C
Force data Hi	00	Force data Hi	00
Force data Lo	09	Force data Lo	09
CRC Lo	48	CRC Lo	49
CRC Hi	0C	CRC Hi	B4

Memory Map

VMX-synergy™ Modbus communication is based on reading or writing equipment parameters from or to the holding registers. The data addressing is zero offset, such that the parameter Modbus address corresponds to the register number.

Modbus Address Memory Map		
Parameter Modbus Address	*Modbus Data Address*	
	Decimal	*Hexadecimal*
0000	0	0000h
0001	1	0001h
• • • •	• • • •	• • • •
0128	128	0080h
• • • •	• • • •	• • • •

4. Communication (continued)

Message Timing

In the RTU mode there is no specific start or stop byte that marks the beginning or the end of a message. Indication of when a new message begins or when it ends is achieved by the absence of data transmission for a minimum period of 3.5 times the transmission time of a data byte. Thus, in case a message is transmitted after this minimum time has elapsed; the network elements will assume that the first received character represents the beginning of a new message.

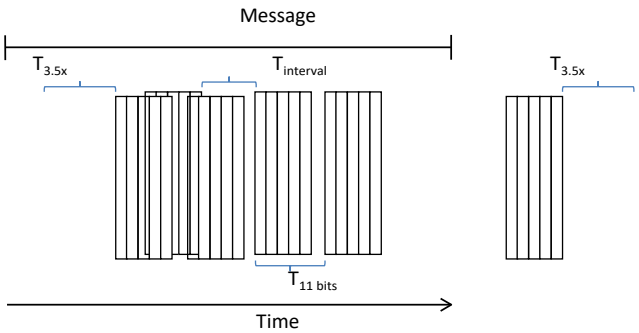

4. Communication (continued)

Modbus TCP

A module is available (part number: AB6223) Modbus TCP network communications. The module has two RJ45 ports for daisy chain connection to multiple units.

Modbus TCP Communication Module (AB6223)

The Modbus TCP module is installed into the option module slot on the VMX-synergy™ unit. See Appendix B for installation instructions.

VMX-synergy™ Configuration

VMX-synergy™ will configure automatically when the module is detected.

IP Address Configuration

The IP address of the module and the host VMX-synergy™ unit is set using an IPConfig tool available from:

http://www.anybus.com/upload/505-8825-IPconfig%20Setup%203.1.1.2.zip

After downloading the above file, unzip it to a temporary folder, and run the executable.

Follow the installation steps.

4. Communication (continued)

When the installation is complete, locate the download location, and run IPConfig from that folder.

The VMX-synergy™ with the installed Ethernet/IP module needs to be installed on the same network as the PC running the Ipconfig application.

Note: The messaging uses broadcast which will not pass through a router. A switch or direct connection (with cross-over cable) must be used.

Start the Ipconfig software. Press the Scan button to have the PC scan for a VMX-synergy™. The IPconfig utility will automatically find VMX-synergy™ units on the network.

See screen capture below of two detected VMX-synergy™ units located on the network.

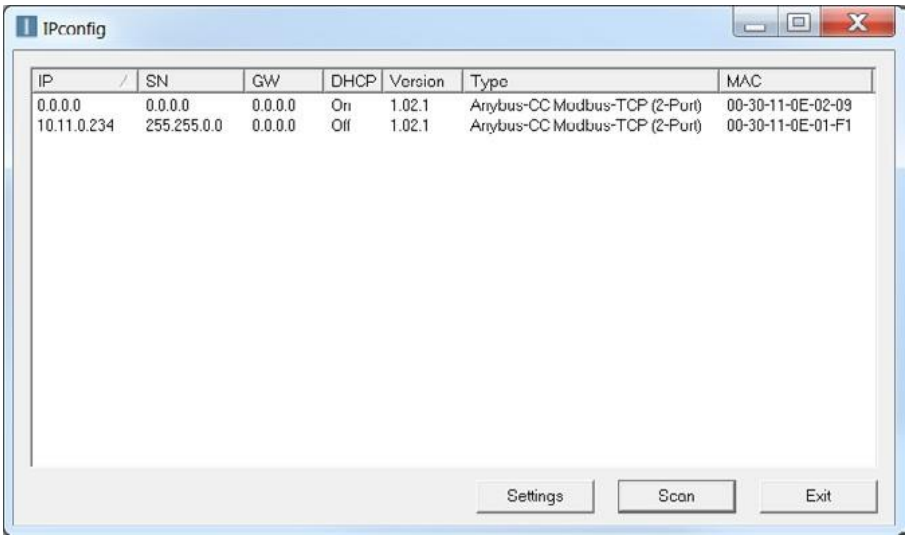

Double click the module to be configured. And set the required IP addresses.

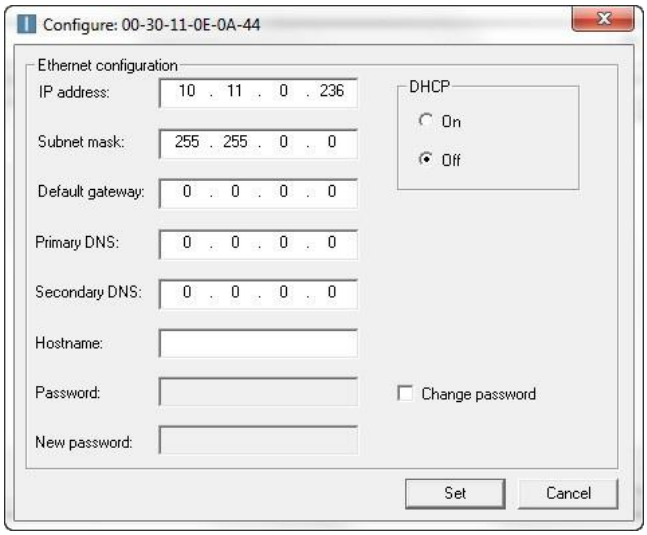

Note: To avoid the IP address being changed by a DHCP server on the network, it is recommended that DHCP is set to OFF.

4. Communication (continued)

When all modules have been configured, recycle the corresponding VMX-synergy™ units. Confirmation of correct module installation and its IP address can be found in the VMX-synergy™ menu under:

Home > Device > Networks.

Note: when entering the 'Networks' menu, the centre button will indicate the type of module installed. If the button states 'Anybus', the module is not installed correctly.

TCP Module Front Panel Indicators

Location of Front Panel Indicators		
Item		Front Panel Diagram
1	Network Status LED	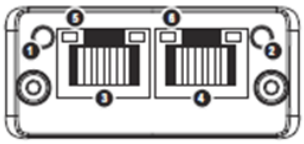
2	Module Status LED	
3	Network Interface, Port 1	
4	Network Interface, Port 2	
5	Link/Activity Port 1	
6	Link/Activity Port 2	

Network Interface LED	
LED State	Description
Off	No link, no activity
Green	Link established (100 Mbit/s)
Green, flickering	Activity (100 Mbit/s)
Yellow	Link established (10 Mbit/s)
Yellow, flickering	Activity (10 Mbit/s)

Network Status LED	
LED State	Description
Off	No power or no IP address
Green	Online, connections active
Green, flashing	Online, no connections active
Red	Duplicate IP, fatal error
Red, flashing	Connection timeout

Module Status LED	
LED State	Description
Off	No power
Green	Controlled, Run state
Green, flashing	Not configured or idle state
Red	Major fault
Red, flashing	Recoverable error(s)

4. Communication (continued)

Modbus TCP Functionality

The Modbus TCP Modbus communication module offers the following functionality:

- Dual switched RJ45 communication ports
- 256 bytes of I/O data in each direction
- 100 Mbps full duplex
- Supports 4 simultaneous (master) connections

All Modbus functions and addresses available are detailed in Chapter 5 “Modbus RTU Communications Table”.

VMX-synergy™ uses Protocol Addressing (Base 0); not PLC Addressing (Base 1). If you are not using the correct selection, all the addresses will be off by 1. Recommended test: monitor a non-critical parameter such as Start Time (address 7104), then manually change the value on the touchscreen and verify that Modbus master actually sees the correct changes.

4. Communication (continued)

Ethernet IP (M40 Module only)

Caution

This option module is specifically designed to be used with the VMX-synergy™ range of soft-start products and is intended for professional incorporation into complete equipment or systems. If installed incorrectly it may present a safety hazard. Before commencing installation and commissioning, the user should ensure they are fully familiar with the VMX-synergy™ unit and have read the important safety information and warnings contained in the VMX-synergy™ User Guide.

Overview

The Ethernet IP Interface is intended to be installed in the VMX-synergy™ option slot and allows the VMX-synergy™ to be connected to an Ethernet IP network. The interface offers the following functionality:

- CIP Parameter Object Support
- 7 Input control Words from the network master to VMX-synergy™
- 5 Output status and data Words from VMX-synergy™ to the network master

Installation

See Appendix 1

VMX-synergy™ configuration

- VMX-synergy™ will automatically configure when the option module is installed

EDS File

- An EDS file for the interface is available from www.Motortronics-uk.co.uk

IP Address Configuration

- Use the IP address configuration tool. Available from: www.motortronics-uk.co.uk/synergy/downloads/ (the tool is contained in the EDS zip file)

Front panel

	Item
1	Network Status LED
2	Module Status LED
3	Ethernet Interface, Port 1
4	Ethernet Interface, Port 2
5	Link/Activity Port 1
6	Link/Activity Port 2

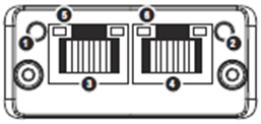

Network status LED

LED State	Description
Off	No power or no IP address
Green	Online, connections active
Green, flashing	Online, no connections active
Red	Duplicate IP, fatal error
Red, flashing	Connection timeout

Module status LED

LED State	Description
Off	No power
Green	Controlled, Run state
Green, flashing	Not configured or idle state
Red	Major fault
Red, flashing	Recoverable error(s)

Ethernet interface LED

LED State	Description
Off	No link, no activity
Green	Link established (100 Mbit/s)
Green, flickering	Activity (100 Mbit/s)
Yellow	Link established (10 Mbit/s)
Yellow, flickering	Activity (10 Mbit/s)

4. Communication (continued)

Ethernet/IP Control and Data Mapping

The interface is supported by the EDS file provided for the Anybus AB6604-C M40 module[1] by HMS Industrial Networks.

Note: This section does not apply to the AB6274 M30 module (see Page 140)

The Class1/Implicit cyclic connection is facilitated through the 150 and 100 assemblies described in the EDS.

Connection 150 (0x96), O->T, requires the controlling system/PLC to supply seven words of data which dynamically set-up the function of the host VMX-synergy™, as well as select any required data to return through T->O as it is connected.

In its simplest control mode, the first 16-bit word (1) can be used to enable or disable the control bits described below. See Table 1 to describe each bit's function. To make bits 0 to 3 visible to the VMX-synergy™, bit-4 (Network Control) must be set.

The next two words (2,3) allows the PLC to set discreet values into selected PNUs. Word 2 is used to select the PNU that is to be written to and word-3 carries the value to be assigned to that PNU[1]. Note that word 3 is a 32-bit container and thus allows writing of values of up to 32 bits long. PNUs that require values less than 32 bits will ignore/truncate the more significant bytes passed into the word 3 during the assign process. If word-2 is set to zero, no data will be assigned. Note also that PLC output array will normally have to be specified as eight 16-bit words and the ladder logic will need to split a 32-bit data word into what would be word-3 and word-4 of that working array. The entire O->T message size must be specified as 16 bytes long.

The last four 16-bit words (4,5,6,7) allow the selection of what PNU data will be returned in the T->O frame "Selected PNU n Value" described in Table 2. Each address set to zero will cause the return value of 0.

WORD	BITs	Value	Note
1	16	Control Word	Bit 0: Start/Stop Bit 1: Freeze Ramp Bit 2: Reset Bit 3: External Trip Bit 4: Network Control Bit 5-15 Reserved
2	16	Write Select PNU Address	Address where word 3's value is assigned to. If zero/null there is no copy assignment.
3	32	Write Value	Value written to the Write Select PNU (assigned in word 2, above). If the PNU expects a 16-bit value, then only Least Significant 16bits are copied.
4	16	Read Select PNU 1 Address	Selects the first datum copied to connection 100.
5	16	Read Select PNU 2 Address	Selects the second datum is copied to connection 100.
6	16	Read Select PNU 3 Address	Selects the third datum is copied to connection 100.
7	16	Read Select PNU 4 Address	Selects the fourth datum is copied to connection 100.

Table 1. Connection 150 O ->T message frame.

[1] See Modbus Manual MAN-SGY-012

4. Communication (continued)

In response Connection 100 (0x64), T->O, delivers five 32-bit words contain the status and requested PNU data. Word 1 carries the status and any fault code. Table 2, describes the meaning of each of the 6 bits making up the status report. If bit-1 (Trip) is set, then the upper 16-bits of the status word will contain the trip code that describes the fault. See the main VMX-synergy™ manual for lists of Trip codes. The remaining four words will contain any PNU values corresponding to the selected PNU addresses specified in the last four words of Connection 150.

WORD	BITs	Value	Note
1	32	Status	Status value defined as: Bit 0: Error/Fault/Trip Bit 1: Running Bit 2: End of Start Bit 3: Current Limited Bit 4: iERS Active Bit 5: Stopping Bit 6: Network Control Active Bit 7-15: Reserved Bits 16-31 Trip Code
2	32	Selected PNU 1 Value	If a value is less than 32 bits it will be assigned to the least significant part. If larger than 32 bits it will be truncated to its 32bit least significant part.
3	32	Selected PNU 2 Value	…as above
4	32	Selected PNU 3 Value	
5	32	Selected PNU 4 Value	

Table 2. Connection 100 T->O message frame.

Class 3 Explicit packets

All the datum described in the class 1 section can be addressed individually as explicit/class 3 messages using the following CIP addressing.

Name	Read Only	Bytes	Class Hex	Instance Hex	Attribute Hex
Control Word		2	A2	2	5
Status	Yes	4	A2	3	5
Write Select PNU Address		2	A2	100	5
Write Value		4	A2	101	5
Read Select PNU 1 Address		2	A2	102	5
Read Select PNU 2 Address		2	A2	103	5
Read Select PNU 3 Address		2	A2	104	5
Read Select PNU 4 Address		2	A2	105	5
Selected PNU 1 Value	Yes	4	A2	106	5
Selected PNU 2 Value	Yes	4	A2	107	5
Selected PNU 3 Value	Yes	4	A2	108	5
Selected PNU 4 Value	Yes	4	A2	109	5

Table 3. Explicit packets

4. Communication (continued)

PLC connection and programming guidance

The example below is taken from a commercially available PLC interface and should be transferable, with the appropriate changes, to others.

EIP Client Properties. Tag names are just specified for this example. The IP Address would be changed to suit.

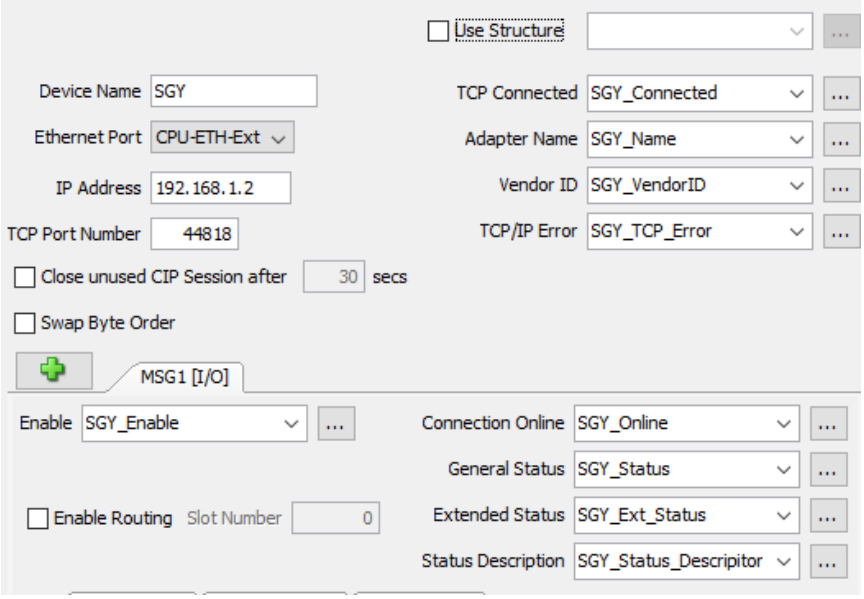

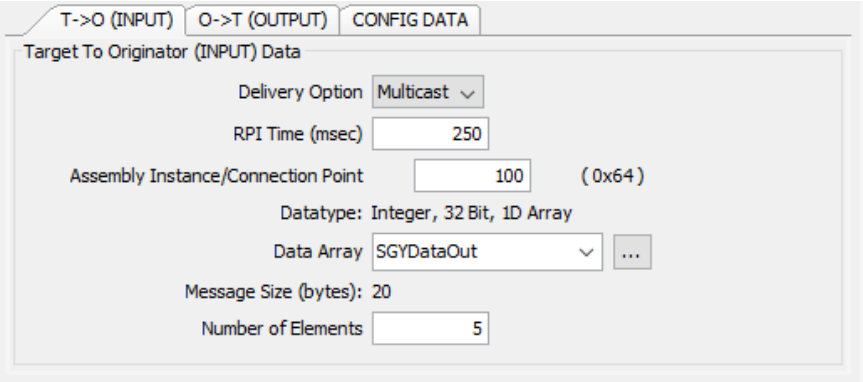

T->O setting reflect Table 2 contents.

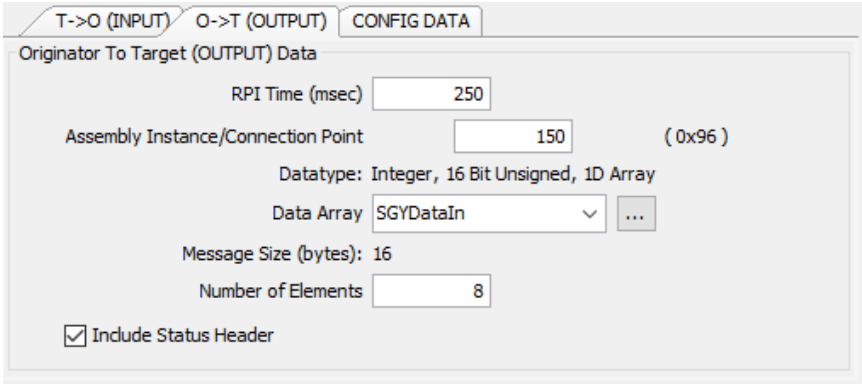

O->T settings reflect Table 1 contents. Note that this is specified as an array of 16 bit integer.

4. Communication (continued)

There is no configuration data required, but the HMS module requires that it is enabled with zero content as shown here.

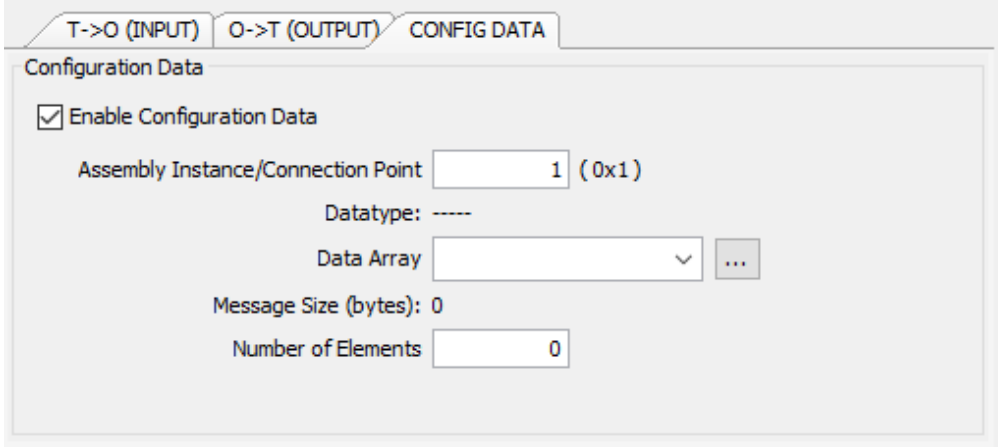

Ladder logic will need to be written which can load the required control bits into SGYDataIn(1). The example below is using a bank of switches, each of which are assigned to a Boolean which in-tern are packed into the first word of the O->T frame defined above.

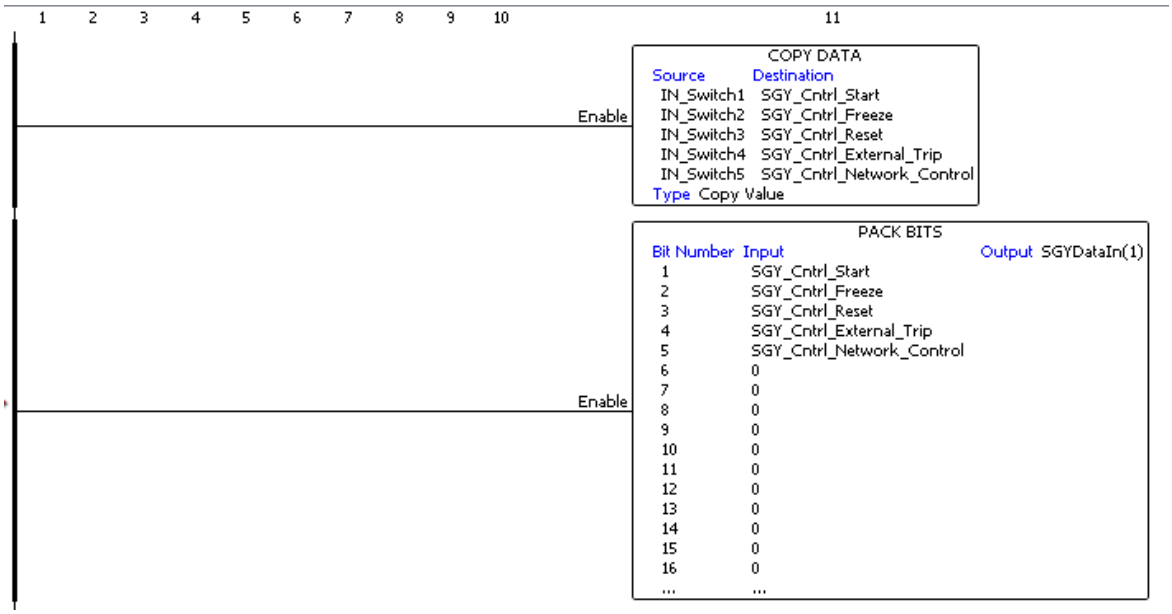

The remainder of the O->T frame will need to be populated as show below. Note the unpacking of the 32bit values into the two successive 16bit array members.

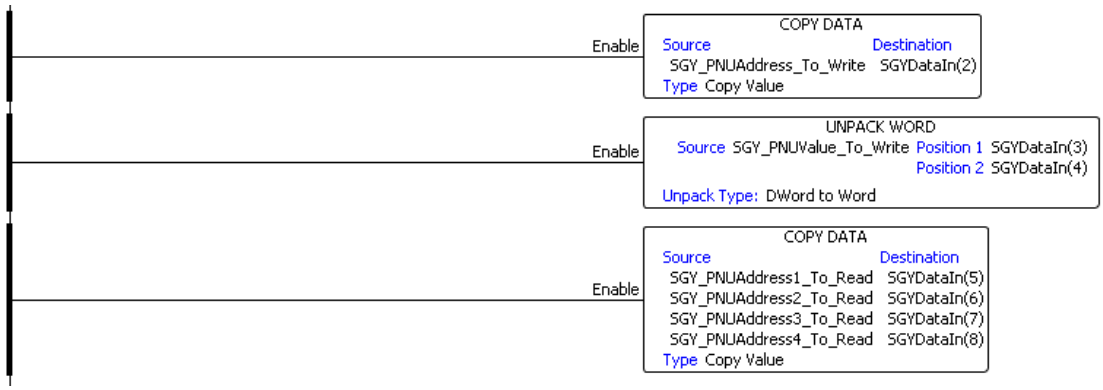

4. Communication (continued)

The T->O frames members can be copied piece wise with the status word being stripped out. The following example shows this with the added functionality creating a description string of the status for MMI use.

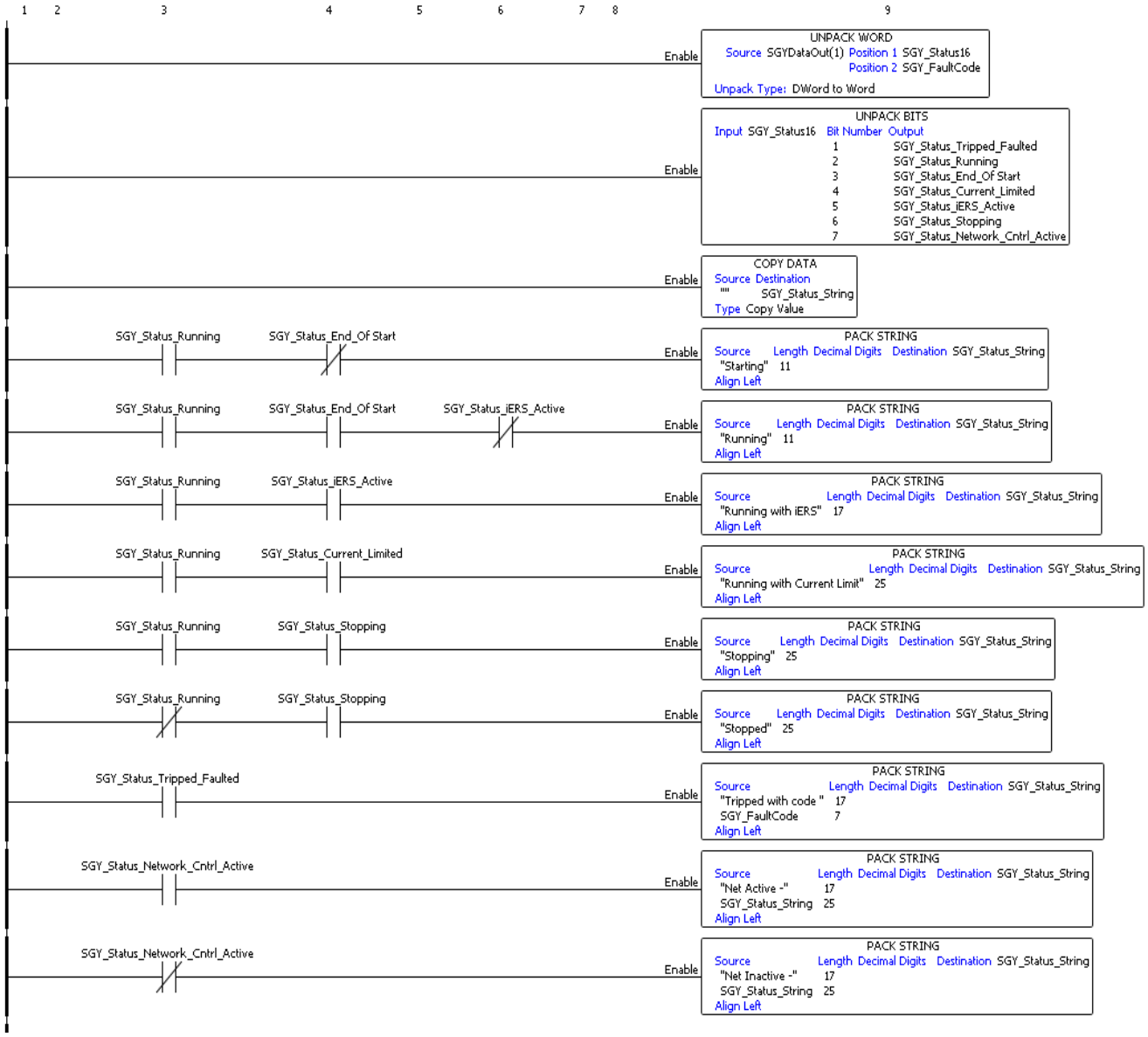

4. Communication (continued)

Ethernet IP (M30 module only)

This module provides (part number: AB6274) Ethernet/IP network communications. The module has two RJ45 ports for daisy chain connection to multiple units.

Ethernet/IP Communication Module (AB6274)

The Ethernet/IP module is installed into the option module slot on the VMX-synergy™ unit. See Appendix B for installation instructions.

VMX-synergy™ Configuration

VMX-synergy™ will configure automatically when the module is detected.

IP Configuration

See Section 4.2.2.

Ethernet/IP Module Front Panel Indicators

See Section 4.2.3.

Ethernet/IP Functionality

The EtherNet/IP communication module offers the following functionality:

- CIP Parameter Object Support
- Implicit and Explicit messaging
- Dual switched RJ45 communication ports
- 10/100 Mbps full duplex
- 2 Input Words from the network master to VMX-synergy™
- 2 Output Words from VMX-synergy™ to the network master

Ethernet/IP Control

The drive profile used by the interface is currently that provided by the Anybus CC Module and is dictated by the EDS file provided by HMS Industrial Networks.

The EDS describes parameters that can be accessed explicitly in an Acyclic manner. Not all of these parameters are implemented in VMX-synergy™. See Table below. CIP paths from these parameters are described in the EDS.

4. Communication (continued)

Supported Parameters			
#	**Description**	**Read Only?**	**Implemented?**
1	Run Forward	N	Y
2	Run Reverse	N	N
3	Fault Rest	N	Y
4	Net Control	N	Y
5	Net Reference	N	N
6	Speed Reference	N	N
7	Torque Reference	N	N
8	Faulted	Y	Y
9	Warning	Y	Y
10	Running Forward	Y	Y
11	Running Reverse	Y	N
12	Ready	Y	Y
13	Ctrl From Net	Y	Y
14	Ref From Net	Y	N
15	At Reference	Y	N
16	Drive State	Y	Y

The EDS also describes the 25 Implicit Cyclic connections, each of which will set and/or get a combination of the above parameters. The following examples are for connection 6 (Extended Control).

CIP Packet functionality – Extended Control								
O -> T Packet (Control)	Bit 7	Bit 6	Bit 5	Bit 4	Bit 3	Bit 2	Bit 1	Bit 0
Byte 0	–	–	#4	–	#3	–	–	#1
Byte 1	–	–	–	–	–	–	–	–
T -> O Packet (Status)	Bit 7	Bit 6	Bit 5	Bit 4	Bit 3	Bit 2	Bit 1	Bit 0
Byte 0	–	–	#13	#12	–	#10	#9	#8
Byte 1	#16							
Note: When a cyclic connection is established and Bit4 (Net Control) is set, the network has control of the VMX-synergy™ soft starter and any other control from VMX-synergy™ front touchscreen, switches, or Modbus interface will be overridden.								

The EDS File is available from the Motortronics UK website:

http://www.motortronics-uk.co.uk/download/ethernet-ip/

4. Communication (continued)

Ethernet/IP (M40 module only)

The interface is supported by the EDS file provided for the Anybus AB6604-C M40 module[2] by HMS Industrial Networks.

Note: This user guide does not apply to the AB6274 M30 module. Consult section 4.3.1.

The Class1/Implicit cyclic connection is facilitated through the 150 and 100 assemblies described in the EDS.

Connection 150 (0x96), O->T, requires the controlling system/PLC to supply seven words of data which dynamically set-up the function of the host VMX-synergy™, as well as select any required data to return through T->O as it is connected.

In its simplest control mode, the first 16-bit word (1) can be used to enable or disable the control bits described below. See Table 1 to describe each bit's function. To make bits 0 to 3 visible to the VMX-synergy™, bit-4 (Network Control) must be set.

The next two words (2,3) allows the PLC to set discreet values into selected PNUs. Word 2 is used to select the PNU that is to be written to and word-3 carries the value to be assigned to that PNU[1]. Note that word 3 is a 32-bit container and thus allows writing of values of up to 32 bits long. PNUs that require values less than 32 bits will ignore/truncate the more significant bytes passed into the word 3 during the assign process. If word-2 is set to zero, no data will be assigned. Note also that PLC output array will normally have to be specified as eight 16-bit words and the ladder logic will need to split a 32-bit data word into what would be word-3 and word-4 of that working array. The entire O->T message size must be specified as 16 bytes long.

The last four 16-bit words (4,5,6,7) allow the selection of what PNU data will be returned in the T->O frame "Selected PNU n Value" described in Table 2. Each address set to zero will cause the return value of 0.

WORD	BITs	Value	Note
1	16	Control Word	Bit 0: Start/Stop Bit 1: Freeze Ramp Bit 2: Reset Bit 3: External Trip Bit 4: Network Control Bit 5-15 Reserved
2	16	Write Select PNU Address	Address where word 3's value is assigned to. If zero/null there is no copy assignment.
3	32	Write Value	Value written to the Write Select PNU (assigned in word 2, above). If the PNU expects a 16-bit value, then only Least Significant 16bits are copied.
4	16	Read Select PNU 1 Address	Selects the first datum copied to connection 100.
5	16	Read Select PNU 2 Address	Selects the second datum is copied to connection 100.
6	16	Read Select PNU 3 Address	Selects the third datum is copied to connection 100.
7	16	Read Select PNU 4 Address	Selects the fourth datum is copied to connection 100.

Table 1. Connection 150 O ->T message frame.

[1] See Modbus parameter tables - Section 5

4. Communication (continued)

In response Connection 100 (0x64), T->O, delivers five 32-bit words contain the status and requested PNU data. Word 1 carries the status and any fault code. Table 2, describes the meaning of each of the 6 bits making up the status report. If bit-1 (Trip) is set, then the upper 16-bits of the status word will contain the trip code that describes the fault. See the main VMX-synergy™ manual for lists of Trip codes. The remaining four words will contain any PNU values corresponding to the selected PNU addresses specified in the last four words of Connection 150.

WORD	BITs	Value	Note
1	32	Status	Status value defined as: Bit 0: Error/Fault/Trip Bit 1: Running Bit 2: End of Start Bit 3: Current Limited Bit 4: iERS Active Bit 5: Stopping Bit 6: Network Control Active Bit 7-15: Reserved Bits 16-31 Trip Code
2	32	Selected PNU 1 Value	If a value is less than 32 bits it will be assigned to the least significant part. If larger than 32 bits it will be truncated to its 32bit least significant part.
3	32	Selected PNU 2 Value	As above
4	32	Selected PNU 3 Value	
5	32	Selected PNU 4 Value	

Table 2. Connection 100 T->O message frame.

Class 3 Explicit packets.

All the datum described in the class 1 section can be addressed individually as explicit/class 3 messages using the following CIP addressing.

Name	Read Only	Bytes	Class Hex	Instance Hex	Attribute Hex
Control Word		2	A2	2	5
Status	Yes	4	A2	3	5
Write Select PNU Address		2	A2	100	5
Write Value		4	A2	101	5
Read Select PNU 1 Address		2	A2	102	5
Read Select PNU 2 Address		2	A2	103	5
Read Select PNU 3 Address		2	A2	104	5
Read Select PNU 4 Address		2	A2	105	5
Selected PNU 1 Value	Yes	4	A2	106	5
Selected PNU 2 Value	Yes	4	A2	107	5
Selected PNU 3 Value	Yes	4	A2	108	5
Selected PNU 4 Value	Yes	4	A2	109	5

Table 3. Explicit packets

4. Communication (continued)

PLC connection and programming guidance

The example below is taken from a commercially available PLC interface and should be transferable, with the appropriate changes, to others.

EIP Client Properties. Tag names are just specified for this example. The IP Address would be changed to suit.

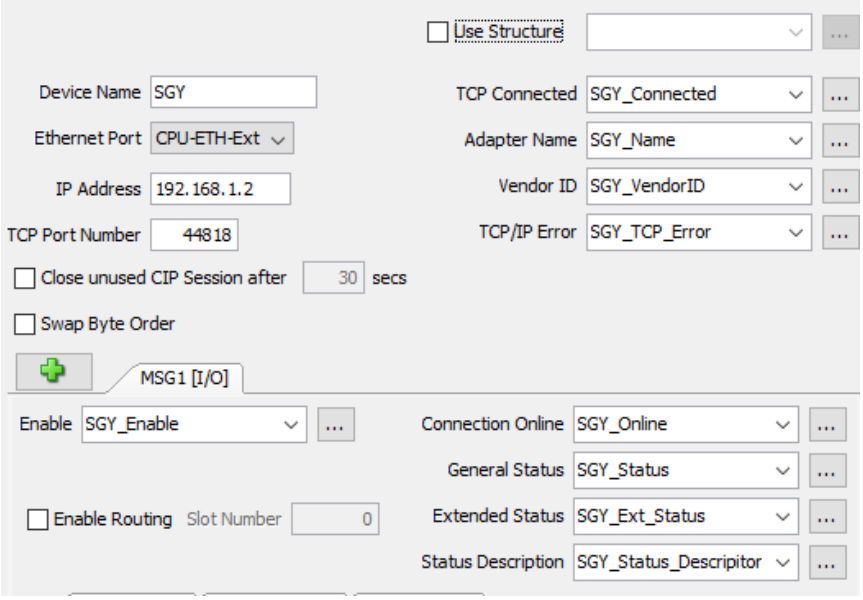

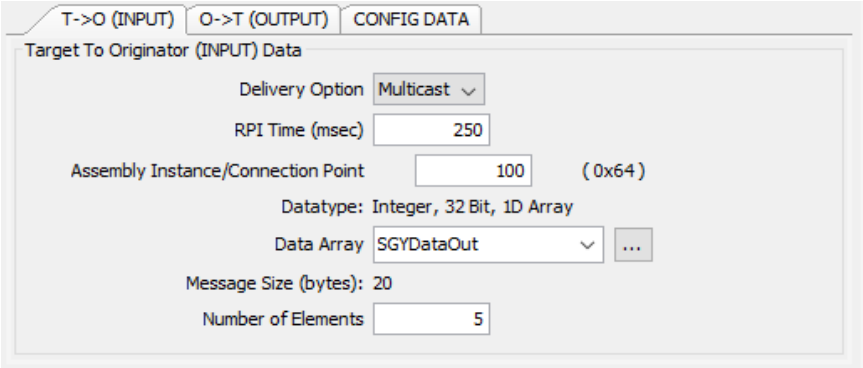

T->O setting reflect Table 2 contents.

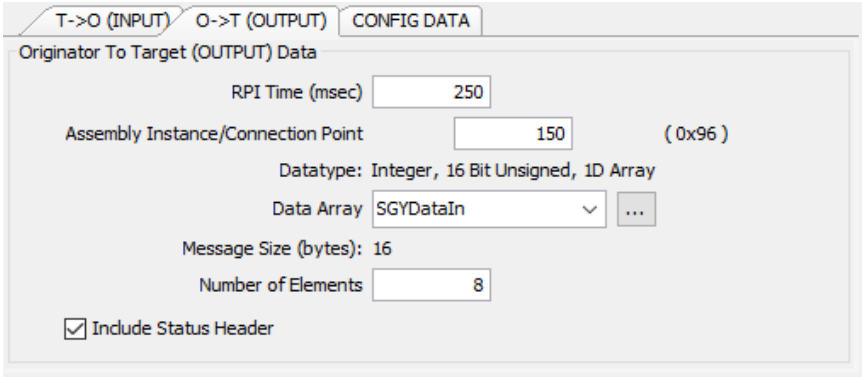

O->T settings reflect Table 1 contents. Note that this is specified as an array of 16 bit integer.

4. Communication (continued)

There is no configuration data required, but the HMS module requires that it is enabled with zero content as shown here.

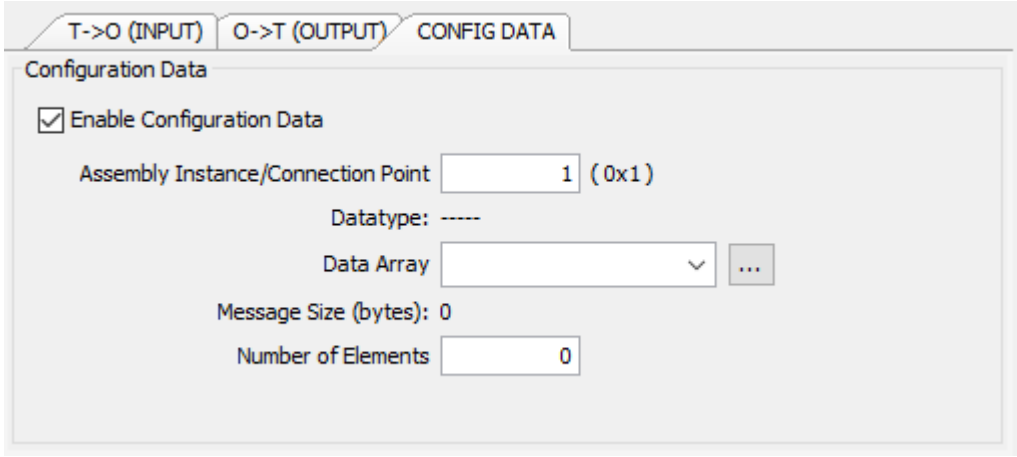

Ladder logic will need to be written which can load the required control bits into SGYDataIn(1). The example below is using a bank of switches, each of which are assigned to a Boolean which in-tern are packed into the first word of the O->T frame defined above.

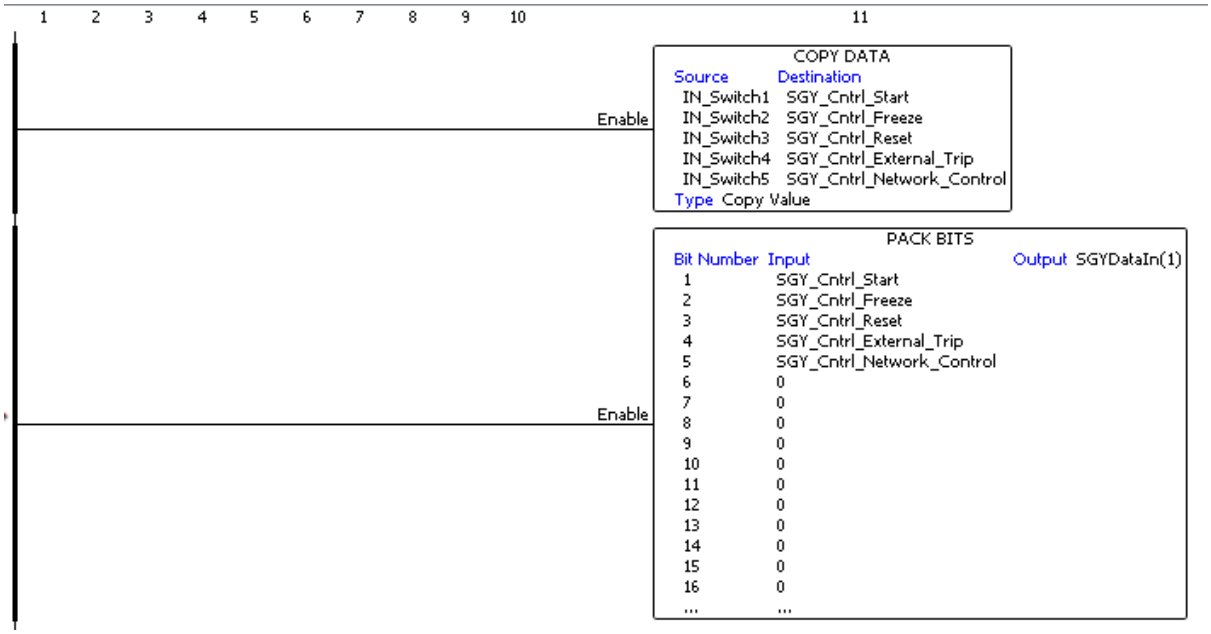

The remainder of the O->T frame will need to be populated as show below. Note the unpacking of the 32 bit values into the two successive 16 bit array members.

4. Communication (continued)

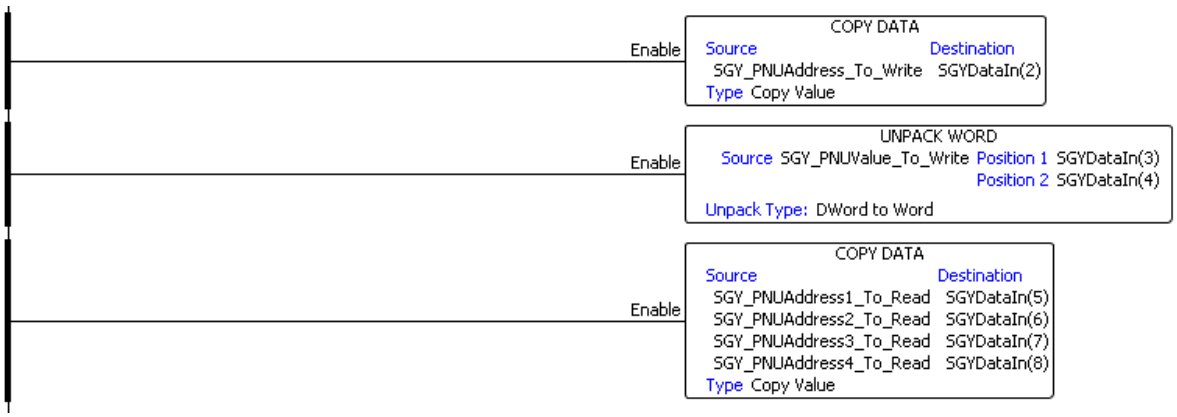

The T->O frames members can be copied piece wise with the status word being stripped out. The following example shows this with the added functionality creating a description string of the status for MMI use.

4. Communication (continued)

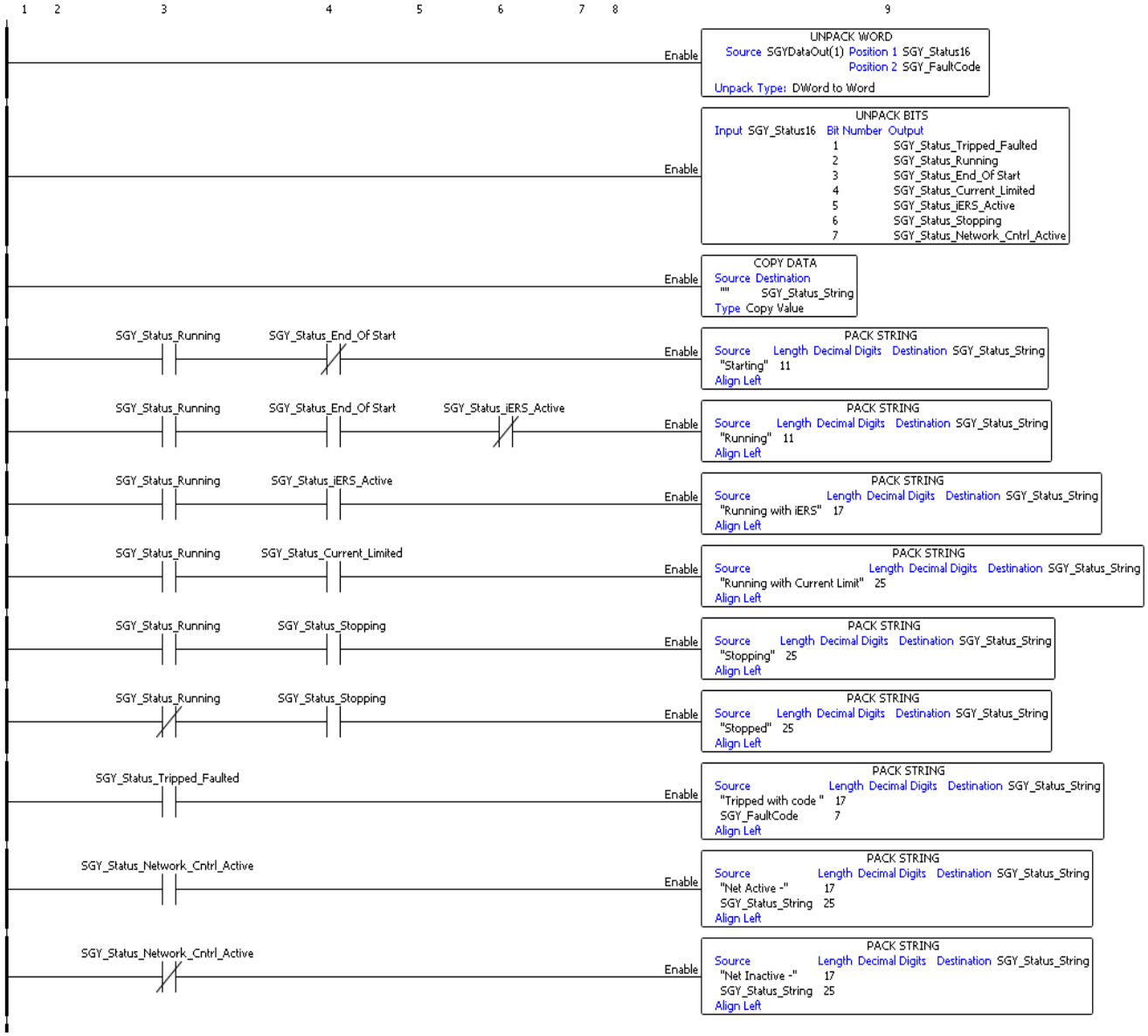

4. Communication (continued)

Profibus DP

The Profibus DP Interface is intended to be installed in the VMX-synergy™ option slot and allows the VMX-synergy™ to be connected to a Profibus DP network.

Profibus DP Communication Module

VMX-synergy™ Configuration

VMX-synergy™ will automatically configure when the option module is installed. Correct installation can be confirmed from the touch screen interface:

Device >> Networks >> Profibus

Profibus DP Module Front Panel Indicators

Front panel

	Item
1	Operation mode
2	Status
3	Profibus network connector

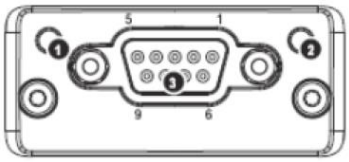

Operation mode	
State	Indication
Off	No power or not inserted
Green	Online data exchange
Green, flashing	Network OK, no data exchange
Single Red flash	Parameter error
Double Red flash	Network error
Status	
State	Indication
Off	No power
Green	Initialised
Green, flashing	Initialised, Self-testing
Red	Error

4. Communication (continued)

Profibus DP Module Pinout

Pin	Function
1	N/C
2	N/C
3	B line Positive RxD/TxD, RS485
4	RTS
5	Bus Ground (GND)
6	+5V Bus output termination power
7	N/C
8	A Line negative RxD/TxD, RS485
9	N/C

Profibus DP Control

The current Profibus interface for this device is specified in the GSD file. This contains the configuration required to run the synchronous standard telegram 1 allowing start/stop and fault monitoring of the VMX-synergy™ unit.

The standard telegram consists of two 16 bit set-point words. The first being the drive control word.

This has the following functionality:

Output Word 1 (STW1)							
Bit 7	Bit 6	Bit 5	Bit 4	Bit 3	Bit 2	Bit 1	Bit 0
Fault Reset	-	Unfreeze Ramp	Ramp On	Enable Operation	Coast Stop	-	Start
Bit 15	Bit 14	Bit 13	Bit 12	Bit 11	Bit 10	Bit 9	Bit 8
-	-	-	-	-	Network Connect	-	-

The second Profibus Standard telegram 1 set-point word (NSOLL_A) is not implemented in this version so will not respond to set values.

The response telegram also consists of two words, this time values generated by the VMX-synergy™ unit in response to the set-points. The first word holds status information and has the following meaning:

Input Word 1 (ZSW1)							
Bit 7	Bit 6	Bit 5	Bit 4	Bit 3	Bit 2	Bit 1	Bit 0
-	Switch on Inhibited	Quick Stop Disabled	Same as Bit 0	Fault (Tripped)	Operation Enabled	Switched On	Ready Switch On
Bit 15	Bit 14	Bit 13	Bit 12	Bit 11	Bit 10	Bit 9	Bit 8
Bit 1	-	-	-	-	-	Network Connected	-

As with the Outputs, the second Profibus Standard telegram 1 value word (NIST_A) is not implemented in this version so should be ignored.

4. Communication (continued)

Anybus Module Installation

1) Ensure that all power is removed from the VMX-synergy™ soft starter prior to installing the option module.

2) Remove the blanking plate from the VMX-synergy™ option module slot.

3) Carefully slide the communication module into the VMX-synergy™ module slot applying slight downward force and forward pitch as shown in Fig 1. As the module moves into the VMX-synergy™ unit, it will be necessary to reduce the pitch of the module Fig 2a and 2b. As the module approaches full insertion, apply slight downward pressure and push fully home Fig 3.

Figure 1

Figure 2a

Figure 2b

Figure 3

4) Ensure no gap is present between the module flange and the VMX-synergy™ body.

5) Tighten the T9 screws to lock the module in place.

Blank Page

5.Trip and Fault Codes

Trip Code Descriptions

Trip Codes (from Trip Log)	
Number & Name	**Description**
101 Input Side Phase Loss	Phase L1 missing at the instant of start up. • The L1 phase is either missing or at a very low level. • Check all incoming connections. • If a main contactor is being controlled by a digital output set to "Running," check that "Contactor Delay" (under "Start Settings") is sufficient.
102 Input Side Phase Loss	Phase L2 missing at the instant of start up. • The L2 phase is either missing or at a very low level. • Check all incoming connections. • If a main contactor is being controlled by a digital output set to "Running," check that "Contactor Delay" (under "Start Settings") is sufficient.
103 Input Side Phase Loss	Phase L3 missing at the instant of start up. • The L3 phase is either missing or at a very low level. • Check all incoming connections. • If a main contactor is being controlled by a digital output set to "Running," check that "Contactor Delay" (under "Start Settings") is sufficient.
104 - 117 Input Side Phase Loss	Any or all phases missing when the motor is being controlled (running). • L1, L2, or L3 are missing or at a very low level. • Check all incoming connections. • Check any fuses/breakers incorporated in the power circuit.
201 Maximum Temperature Exceeded	Internal heatsink temperature has exceeded 80°C. • It is possible the VMX-synergy™ is operating outside specified limits. • Check enclosure ventilation and airflow around the VMX-synergy™ • If the unit trips immediately, the internal temperature sensor could be faulty.
208 Thermal Sensor Trip	Thermal sensor failure. • The internal temperature sensor has failed. • Contact your supplier.
300-307 Thyristor Firing Trip	One or more of the internal control thyristors (SCRs) have failed to turn on properly (In-Line "Firing Mode"). • The VMX-synergy™ has detected that the SCRs are not operating as expected. • Check all incoming and outgoing connections.
350-357 Thyristor Firing Trip	One or more of the internal control thyristors (SCRs) have failed to turn on properly (Delta "Firing Mode"). • The VMX-synergy™ has detected that the SCRs are not operating as expected. • Check all incoming and outgoing connections.

5. Trip and Fault Codes (continued)

Trip Codes (from Trip Log)	
Number & Name	**Description**
401 Motor Side Phase Loss	One or all of the phases are missing on the motor side during the instant of start up. • T1, T2, or T3 are missing or at a very low level. • Check that the motor is connected to T1, T2 and T3. • Ensure any disconnecting device between the VMX-synergy™ and the motor is closed at the instant of start up.
402-403 Motor Side Phase Loss	One or all of the phases are missing on the motor side during the instant of start up when the motor is being controlled. • T1, T2 or T3 are missing or at a very low level. • Check all incoming and outgoing connections.
601 Control Voltage Too Low	The internal control supply of the VMX-synergy™ level has fallen to a low level. • Can be caused by a weak 24Vdc/115Vac/230Vac control supply. • Ensure 24Vdc/115Vac/230Vac supply meets the requirements specified in "Electrical Installation" Chapter 2 or the Quick Start Guide.
701-710 Sensing Fault Trip	One or more of the internal control thyristors (SCRs) have failed to turn on properly. • The VMX-synergy™ has detected that the SCRs are not operating as expected. • Check connections all incoming and outgoing connections.
801-802 Fan Problem	One or more of the internal cooling fans has failed. • To ensure the heatsink is cooled sufficiently, the VMX-synergy™ will trip if the fans fail to operate. • Check VMX-synergy™ fans for signs of damage or contamination.
1001 Short Circuit Thyristor	One or more of the internal control thyristors (SCRs) have failed short circuit. • The VMX-synergy™ has detected that the SCRs are not operating as expected. • Check all incoming and outgoing connections.
1201 Current Limit Timeout Trip	The motor has been held in current limit longer than the "Start Current Limit Time." • It is likely that the current limit level has been set too low for the application. • Increase the current limit level or timeout period.
1202 Current Limit Timeout Trip	The motor has been held in current limit longer than the "Stop Current Limit Time." • It is likely that the current limit level has been set too low for the application. • Increase the current limit level or timeout period.
1301 Overload Trip	The "Overload" has exceeded 100%. • The VMX-synergy™ is attempting to start an application that is outside its capacity or it is starting too often. • Refer to the overload trip curves to determine whether the VMX-synergy™ has been sized correctly.
1302 Overload Trip	The motor current has exceeded 475% (i-Synergy) for a time greater than 250ms. • The VMX-synergy™ is attempting to start an application that is outside its capacity with a "high current limit level" set. • Refer to the overload trip curves to determine whether the VMX-synergy™ has been sized correctly and check current limit level.

5. Trip and Fault Codes (continued)

Trip Codes (from Trip Log)	
Number & Name	**Description**
1401 Shearpin Trip	The motor current has been higher than the "Shearpin Trip Level" for the "Shearpin Trip Time." • This trip is not active during soft start and soft stop and is "off" by default. • If "Shearpin Trip" is not required, turn "off" in "Trip Settings."
1501 PTC Thermistor Trip	The PTC thermistor value has exceeded the trip level (4kΩ). • The PTC thermistor connected to the PTC input has exceeded its response temperature, or the PTC input is open circuit. • If the PTC Trip is not required, turn "off" in "Trip Settings."
1701 Communications Trip	Communications failure. • A parameter has not been written to or polled in the time set in the "Timeout" period (under "Device Networks"). • If the "Communications Trip" is disabled, the VMX-synergy™ will not be stopped by the communications failure.
1801-1802 Bypass Relay Trip	One or more of the internal bypass relays has failed to close. • The internal bypass relay has failed, or the control supply is to weak. • Ensure 24Vdc supply meets the requirements specified in "Electrical Installation" Chapter 2 or the Quick Start Guide.
1803 Bypass Relay Trip	One or more of the internal bypass relays has failed to open. • The internal bypass relay has failed, or the control supply is too weak. • Ensure 24Vdc supply meets the requirements specified in "Electrical Installation" Chapter 2 or the Quick Start Guide.
1901 Cover Open, Close to Enable Motor Start	The VMX-synergy™ cover is open. • The cover is open or not closed properly. • Close cover, or if Cover Trip is not required, turn off in "Trip Settings."
2001 Remote Start is Enabled	The Remote Start signal is active. • The "Start/Stop" signal was active during power up or Reset. • Turn off "Start/Stop," or if Remote Start trip is not required, turn "off" in "Trip Settings."
2101 Rotation L1 L2 L3 Trip	The input phase rotation is RYB (L1, L2, L3). • The phase rotation is opposite to that required. • Change phase rotation, or if "RYB" trip is not required, turn "off" in "Trip Settings."
2102 Rotation L1 L3 L2 Trip	The input phase rotation is RBY (L1, L3, L2). • The phase rotation is opposite to that required. • Change phase rotation, or if "RBY" trip is not required turn "off" in "Trip Settings."
2013 Rotation Undetermined Trip	The phase rotation is undetermined. • The VMX-synergy™ is unable to determine whether the input phase rotation is L1, L2, L3 or L1, L3, L2. • Check all incoming and outgoing connections.
2201-2209 MPU Trip	Internal VMX-synergy™ failure of the main processing unit. • The VMX-synergy™ has failed internally and is unable to recover automatically. • Cycle the control supply. • If the fault is not cleared, contact your supplier.

5. Trip and Fault Codes (continued)

Fail Safe Codes

Main Board Trip (2402 – 2436)

A trip number in the range of 2402 to 2436 indicates that a process on the main board has been affected in some way and is unable to recover automatically.

- The trip is turned ON and OFF via the "Main Board Trip" (Advanced/Trips)
- The default for this trip is ON
- The trip MUST be reset using the either the digital input, touchscreen, or bus command depending on the control method set
- As this is a special case, it is NOT possible to reset this trip by cycling the control supply

Fail Safe Codes Associated with the Main Board	
Code #	**Description**
2402	Initialization process has been unsuccessful.
2404	Initialization of the Parameters has been unsuccessful.
2406	Initialization of the Overload has been unsuccessful.
2408	Initialization of the Parameter Read has been unsuccessful.
2410	Initialization of the Overload Read has been unsuccessful.
2412	Initialization of the Current measurement has been unsuccessful.
2420	A main process on the Main Board has been affected and is unable to recover automatically.
2422	A main process on the Main Board has been affected and is unable to recover automatically.
2424	A main process on the Main Board has been affected and is unable to recover automatically.
2426	Communication between the Main Board and Touchscreen Board has been affected and is unable to recover automatically.
2428	The modbus communication has been affected and is unable to recover automatically.
2430	The parameter save has been unsuccessful.
2432	The logging function has been unsuccessful.
2434	A main process on the Main Board has been affected and is unable to recover automatically.
2436	The Anybus communication has been affected and is unable to recover automatically.

Touchscreen Trip (2501 – 2581)

A trip number in the range of 2501 to 2581 indicates that a process on the touchscreen board has been affected in some way and is unable to recover automatically.

- The trip is turned ON and OFF via the "Touchscreen Trip" (Advanced/Trips)
- The default for this trip is OFF
- With the trip OFF the touchscreen display may display the 'start up' screen momentarily as it recovers automatically
- When the trip is turned ON it is reset using the either the digital input or touchscreen or bus command, depending on the control method set
- It is possible to reset this trip by cycling the control supply

Fail Safe Codes Associated with the Touchscreen Board		
Local Touchscreen Code	**Remote Touchscreen Code**	**Description**
2501 – 2529	2551 – 2579	A main process on the Touchscreen Board has been affected.
2530	2580	Communication between the Main board and Touchscreen Board has been affected.
2531	2581	The touchscreen has become unresponsive.

When a remote touchscreen is used, the same trips can be generated. To discriminate between the remote and local screen 50 is added to each code.

5. Trip and Fault Codes (continued)

Logging Trip (2601 – 2603)

Trip numbers that are in the range of 2601 to 2603 indicate that a process associated with the logging has been affected in some way and has been unable to recover automatically.

- The trip is turned ON and OFF via the "Logging Trip" (Advanced/Trips).
- The default for this trip is OFF.
- With the trip OFF, the logging function will temporarily be disabled if a continual failure is detected.
- When the trip is turned ON, it is reset using the either the digital input or keypad or bus command, depending on the control method set.
- It is possible to reset this trip by cycling the control supply.

Fail Safe Codes Associated with the Logging Function	
Code #	**Description**
2601	The initialization of the event logging function has been unsuccessful for 20 consecutive attempts.
2602	The event logging function has been unsuccessful for 20 consecutive attempts.
2603	The SD card could not be accessed after 20 consecutive attempts.

6. Intelligent Energy Recovery (iERS)

Chapter 6

Enabling Intelligent Energy Recovery System (iERS)

iERS can produce energy savings in suitable applications. However, the user should have an understanding of the application and load characteristic before enabling the feature.

Loads which exhibit frequent changes in motor torque may cause the VMX-synergy™ unit to switch rapidly between the iERS on state and the 'bypassed' state as the motor torque changes. If left unchecked, such switching may cause premature wear of the internal bypass components and may invalidate the warranty.

If the loaded/unloaded state changes more than 4 times per minute, iERS should not be enabled.

Applications that are typically well suited to the iERS feature include; Artificial Lift Pump Jacks, Injection Moulding Machines, Mixers, Saws, Rolling Mills, Grinders, Hydraulic Pumps, Crushers, Conveyors, Compressors and Vertical Transport applications.

If the requires further support regarding the suitability of the application, he should seek support from Motortronics UK or an Authorised Distributor before enabling the iERS function.

Principles

Every wound-field electric motor must consume some minimum amount of energy to provide a magnetic field which enables it to work at all. With DC motors the field is under separate control, so that the amount of magnetising energy can be adjusted to be sufficient to overcome losses and provide an armature reaction appropriate to the load.

The squirrel cage AC induction motor has no such provision, with the result that at any load less than it's rated full load (at full speed), energy is wasted. When a squirrel-cage motor is supplied at a constant terminal voltage, as when it is connected directly to the supply without a controller of any kind, the strength of the field flux is fixed by the supply voltage. At normal running speed the field will take a fixed quantity of energy regardless of the torque demanded by the mechanical load.

The energy required to support the load torque is determined by the torque demand. As load torque increases, the rotor slows down a little (i.e. 'slip' increases), causing the induced rotor currents to increase also, and so to increase the torque. These additional currents in the rotor are balanced by additional current in the stator coils.

Conversely, if load torque demand falls, the slip decreases, the rotor currents decrease, and the current in the stator decreases accordingly. But at constant terminal voltage, the current, and therefore the energy, providing the stator field flux remains unchanged at any level of load torque demand. As a consequence, the efficiency of an induction motor falls as the load falls.

6. Intelligent Energy Recovery (continued)

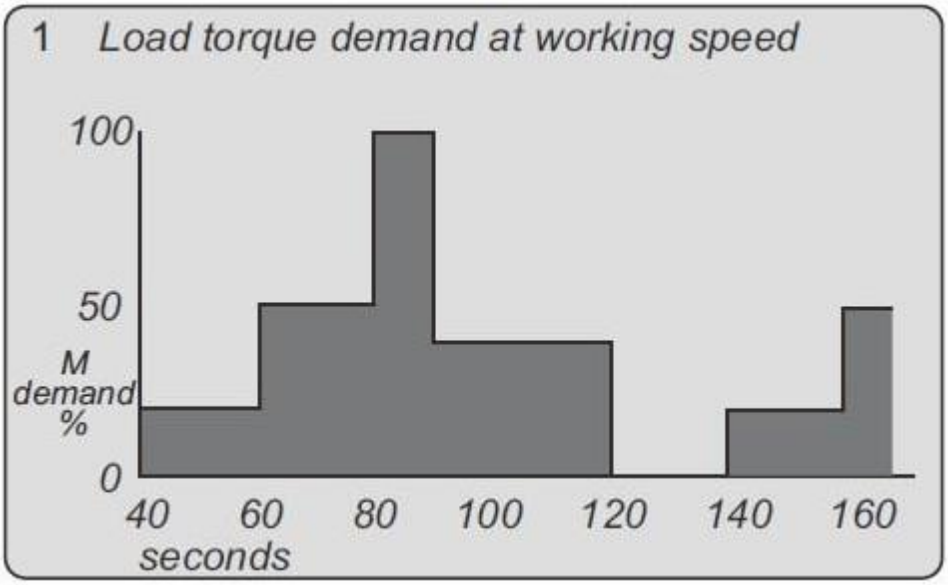

Typical duty cycle for a machine load where the Torque Demand varies

Principles (continued)

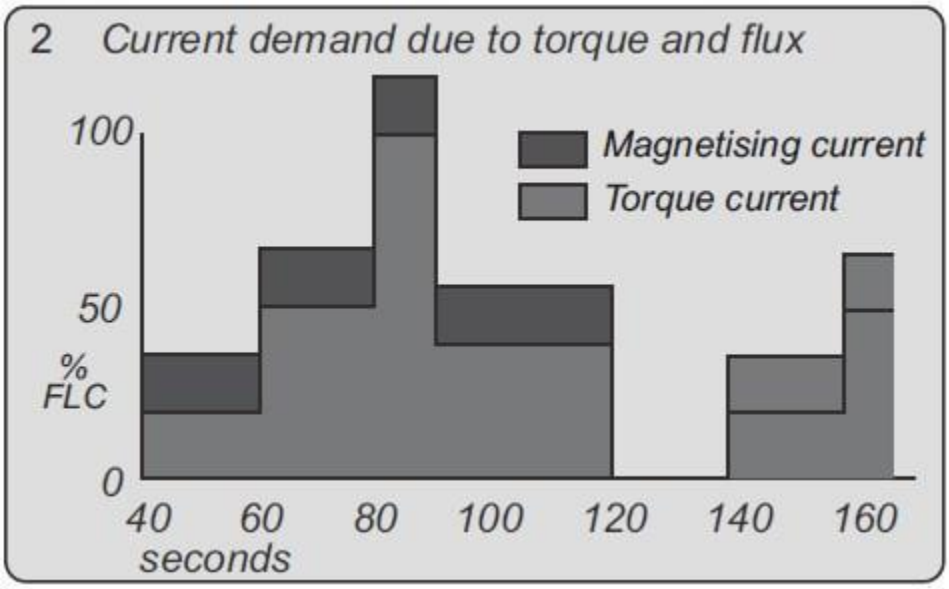

Torque Demand converted to an equivalent current with the motor magnetizing current added

6. Intelligent Energy Recovery (continued)

Advantages of IERS

A soft starter with an iERS feature alters the motor operation. The iERS function reduces the terminal voltage applied to the motor so that the energy needed to supply the field is more-closely proportioned to the torque demand. The effect is shown in the Figure below.

NOTE the curves shown in Fig. 3 are the 'full speed' end of the conventional torque/current curves. The present considerations do not affect soft starting options or strategies. When the motor terminal voltage is at its 'nominal' or rated value and when the load is the maximum for which the motor is rated, the operating point of the motor on the current curve is at A.

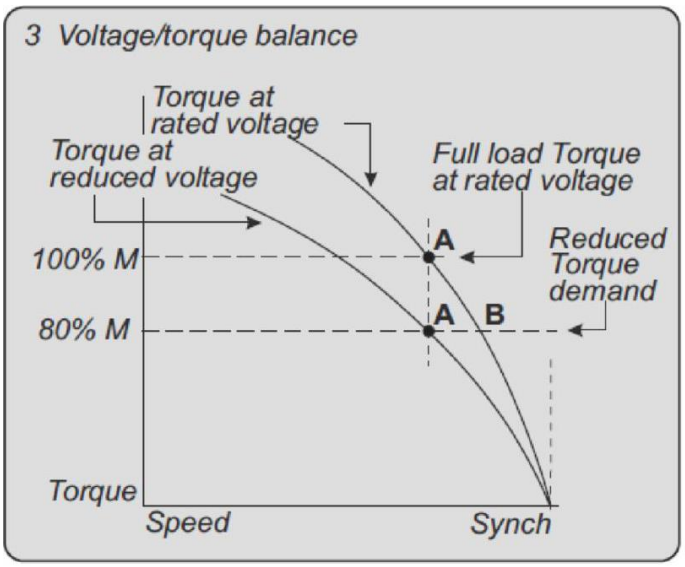

Advantages of iERS (continued)

If the load falls, a motor supplied at a fixed voltage will speed up slightly, the current demand will reduce, and the operating point moves along the curve to point B. Because the torque developed by a motor is proportional to the square of the applied voltage, lowering the terminal voltage reduces the torque. If the reduced voltage is correctly chosen, the working point at the reduced torque demand becomes the point A'.

By reducing the terminal voltage, the motor has in effect been 'changed' for one which has a lower rated power output. A reduced terminal voltage also means a reduced field energy requirement and this simple relationship enables the iERS function to maintain the efficiency of the motor over nearly the whole of the load range from 'no load' upwards.

In practical terms, 'no load' means no external load. There are the internal mechanical and electrical losses to be overcome - friction and windage of the rotor at speed, and the electrical heating and hysteresis losses. The ideal response to the 'no load' condition would be to supply precisely the amount of magnetising current needed to provide the armature reaction to balance the losses. This is what the iERS feature of a soft starter seeks to do, continuously and automatically.

Additional Benefits in Practice

It is usual to select a standard motor with a rating somewhat higher than the maximum demand of the driven load. The motor selected for any given application will almost certainly be over-rated for this reason alone and therefore, when supplied at rated voltage, energy could be saved even at full load.

Furthermore, there are those applications where the size of motor has to be chosen to provide for high loadings which occur only intermittently, although the load demand at other times is much less.

6. Intelligent Energy Recovery (continued)

How Much Energy?

The amount of energy used by a squirrel cage induction motor operating with a soft starter in iERS mode is shown in Fig. 7.4.1, for the same duty cycle as Fig. 7.1.1. By reducing the voltage when torque demand is below maximum, the magnetising current is proportioned to the torque current.

Compare Fig. 4, energy-optimising, with Fig. 7.1.2, non - iERS.

(These graphical representations are illustrative only, not to scale). To arrive at any exact figure for the energy saved requires each individual case to be examined in detail, taking into account the following variables;

- Motor rating, type, and any special characteristics;
- Load, load characteristics, duty cycle;
- Supply voltage; Supply authority tariffs and the user's particular terms.

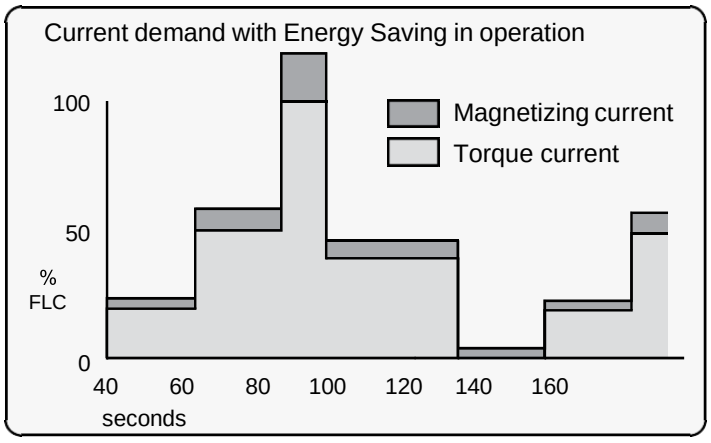

Energy Savings

The calculations to cover all the likely or possible conditions would be laborious. An empirical method for arriving at a usefully realistic estimate has been devised by Motortronics UK Ltd.

Used with a proper sense of engineering circumspection, the tables on page 10 allow a user to gain a reasonably close estimate of the saving to be achieved within the motor by using an iERS soft starter. The method does not include any additional savings and benefits conferred by other sources, such as:

- Reduction of heating losses in cabling because of the lower voltages
- Further energy saving and other benefits deriving from the soft starting process itself
- Reduced total energy demand
- Reduced wear and tear
- Reduced maintenance and replacement costs

6. Intelligent Energy Recovery (continued)

Estimating Energy Savings

Basis for estimation

- 3-phase squirrel cage induction motor, standard type
- Supply: 380 to 440V, 50Hz
- Supply voltage >min. working voltage on motor rating plate
- Operation 30% rated nameplate full load

Table 7.5.2 - Energy Savings Modifying Factors			
Motor Poles		*Motor Slip*	
Number of Poles	*Add (% kW)*	*% Slip*	*Add (% kW)*
2	-0.5	0.5	-0.5
4	0	2	0
6	0.5	3.3	0.5
8	1	5	1

Table 7.5.1 - Energy Savings Estimations			
Motor Size	*kW*	*HP*	*Estimated Savings (% rated kW)*
Less than	5	7.5	10
	22.5	30	6.5
	55	75	3.5
	110	150	2.5
More than	110	150	1.5

Examples of Estimated Saving

1) A 37.5 kW 4-pole motor
From Table 7.5.1, use the estimated saving figure for the next higher rating, ie 55 kW
The saving would be, approximately - 3.5% x 37.5 kW = 1.3125 kW

2) A 37.5 kW2-pole motor.
From Table 7.5.1, use the estimated saving figure for the next higher rating, ie 55 kW
From Table 7.5.2, apply the pole-number factor of -0.5 %. The saving would be, approximately - (3.5 % - 0.5 %) x 37.5 kW = 1.125 kW

3) A 37.5 kW Z-pole 'low slip' motor
From Table 7.5.1, use the estimated saving figure for the next higher rating, ie 55 kW
From Table 7.5.2, apply the pole-number factor of -0.5 % and the %-slip factor of0.5%
The saving would be, approximately - (3.5 % - 0.5 % - 0.5 %) x 37.5 kW = 0.938 kW

6. Intelligent Energy Recovery (continued)

iERS with VMX-synergy™

During start-up, the VMX-synergy™ software uses a patented method to compute and store a reference value for the power factor. When the motor has reached full speed and is driving the load at the demanded torque, VMX-synergy™ enters the 'motor running' stage. At this stage, if required, the motor may also operate in 'iERS Mode'. Entering this mode can be pre-set from the VMX-synergy™ touchscreen and stored for automatic operation, which will suit the majority of applications where it is required. This is the default operating mode for VMX-synergy™. It can also be N/Ad on and off while running by using either the iERS button in the Advanced Settings of the touchscreen, or through external circuitry connected to one of the programmable inputs and controlled by the driven process.

'iERS' Intelligent Energy Recovery System will sense when at a level where we will gain no benefits from Energy Saving, VMX-synergy™ will energize the bypass relays, and there will be minimal losses from the motor controller.

Energy Saving will try to be active at all times and is fully automatic. The bypass relays will only energize depending upon the measured thermal capabilities of the unit, percentage loading of the motor, and the power factor, etc.

The bypass relays will open at 80% loading of the motor current set and enter the energy saving mode. The relays will not re-energize until the unit measures a level of at least 90% of the motor current set, or we have surpassed the measured thermal capabilities of the unit, or the power factor is close to full loading.

There should be even higher levels of energy saving, as when the motor is fully loaded the relays will be energized and we will have no losses in the thyristors. We will therefore gain maximum saving which is especially beneficial on typical cyclic loading applications such as pump jacks, injection molding machines, mixers, saws, etc.

In iERS mode the reference power factor is continuously compared with the running power factor. The software continuously uses this comparison to compute and adjust the firing point of the thyristors in order to maintain the best power factor. This method of continuous control minimizes wasted energy caused by overfluxing the motor. It also maintains the power factor at the most appropriate value for every condition of load demand. This can produce a significant reduction in the kVA demand.

This is an operating condition that may, at light or partial load conditions, provide the benefit of energy saving and if selected, is continuous from the dwell period until a STOP command is initiated or the mode is disabled. It should be noted that this function is inhibited by the software if the current being drawn by the motor exceeds 80% of the set current of VMX-synergy™ (at full voltage when the motor enters its running stage with the iERS mode selected).

The method of power factor management described does not affect motor performance, nor does it detract from the motor's capability to respond to changes in load demand. This feature of the VMX-synergy™ Soft Starter is a purely electrical function which has the effect of ensuring that the motor delivers the torque demanded at all times but allows it to draw only the precise amount of magnetizing current required to support that torque output. Without this feature, the motor would draw the maximum magnetizing current regardless of load. The iERS function cannot improve the power factor beyond what it would ordinarily be at full load, but it does make the optimum improvement possible at any partial load.

7. Applications

Motor Suitability and Associated Considerations

The VMX-synergy™ soft-starter is based on the "Motortronics UK System" of microprocessor-based optimising soft-starters which have been used world-wide in critical and non-critical systems. Since 1983, Motortronics UK System soft-starters have successfully operated with almost every type of load and environment from the Antarctic to the Jungle. The design has proven to be both reliable and adaptable and provides a powerful mechanism with which to control fixed-speed induction motors. However, due to the intrinsic differences between electronic and electro-mechanical starting systems, there are a number of simple rules and observations to follow when using the VMX-synergy™ soft-starter. This section introduces guidelines for the user and those incorporating the unit as part of their system design.

Suitability

In principle, any induction motor can be started by a soft-starter. Normally, the breakaway torque of the load should be less than the full-load torque of the motor, unless a motor with a high locked rotor torque characteristic is employed. As a quick assessment, any load which has a low or no-load start with a moderate starting time, or which can be started with a star-delta starter, auto transformer or other forms of reduced-voltage starting, can be considered to be a potential application for a soft-starter.

Induction Motor Characteristics

Induction motors are required to provide sufficient torque to accelerate the motor and its load from standstill to full speed and to maintain full speed efficiently at all torque levels up to the design full load torque. Most modern induction motors have characteristics that are wholly suitable for use with soft starters, however, the characteristics vary considerably between different manufacturers and design types. It is important that the motor is capable of providing sufficient torque to drive the load at all speeds between standstill and rated speed, to enable the VMX-synergy™ to function properly. It is particularly important that the motor to be soft started does not have a low pull-up or saddle torque otherwise the load may not be accelerated correctly.

The primary function of the soft-starter is to act as a torque-regulating device. It cannot apply a torque greater than that which the motor generates. For this reason, problematic applications for which many different starting methods have been tried but failed, may need analysis of the motor or load performance before a soft-start can be successfully applied.

Rating

For most applications, except high inertia loads, the starting demands and the inertia of the rotating masses are small enough to be insignificant. This means that no special consideration needs to be given to the rating of the soft-starter, other than to ensure that it is equal or marginally greater than the rated voltage and current of the controlled motor.

Alternatively, if the number of poles of the motor and the moments of inertia of the load (Jload) and motor rotor (Jmotor) are known, a soft-starter will be suitable if the figures comply with the criteria given in the bottom row of the following table:

Table 8.4.1

Number of Poles	2	4	6	8
Synchronous Speed (rpm) Hz)	3000	1500	1000	750
(Jload)/(Jmotor) less than	5	15	20	25

7. Applications (continued)

Maximum Motor Cable Length

The length of the cable between the output terminals of the starter and the motor should not normally be greater than 100 metres.

Power Factor Correction Capacitors

Power factor correction capacitors applied to a single motor MUST always be connected by a separate contactor placed on the SUPPLY side of the VMX-synergy™ soft-start. Capacitors should be switched in after top-of-ramp (full line voltage) is reached and switched out of circuit before a stop is initiated.

It is important that any total system PFC scheme that automatically corrects for a range of inductive loads is not operated in such a way as to leave it heavily over-compensated since this might introduce oscillations leading to damaging over-voltages.

Lightly Loaded, Small Motors

Lightly loaded, small-sized (less than 2kW), star connected motors can produce high voltages at the motor terminals when shut down by simply opening the line contactor. As these voltages can damage the soft-starter, it is safer to control the opening of the line contactor with the soft start run relay contacts.

Motors Fitted with Integral Brakes

Motors that include an integral, electrically operated brake, internally connected to the motor input terminals, can only be soft-started when the brake is re-connected to the supply through its own contactor.

Older Motors

The action of the fully-controlled soft-starter introduces harmonic currents and voltages to the motor. It is therefore, important to ensure that the motor employs techniques such as rotor skewing in its construction to suppress the effects of harmonic fluxes and avoid rough starting. This is rarely a problem with modern motors because nearly all motors designed in the last 20 years employ these techniques.

Wound-rotor or Slip-ring Motors

Slip-ring induction motors ALWAYS need some resistance in the rotor circuit to ensure that sufficient rotational torque is generated to overcome any alignment torque, which is present at start-up. The resistance can be safely shorted out in the normal fashion with a contactor controlled by the programmable relay set as 'top-of-ramp' contacts.

Enclosures

Thyristors are not perfect conductors, and the passage of current through them causes heat dissipation in the body of the device, which in turn causes the heatsink temperature to increase. As a rough guide, the heat generated is 1 watt/amp/phase when energy saving, which equates to a dissipation of 30 watts from the heatsink for a line current of 10 amps. Therefore, all cabinets or enclosures that house soft-starters should have adequate ventilation (refer to the Mechanical installation procedures, section 1.0 for more detailed information).

High-Efficiency Motors

Due to an inherently steep front to the speed/torque curve, high efficiency motors can exhibit instability when lightly loaded and the iERS parameter group may need adjusting to compensate.

EU Compliance with the EMC Directive

When considering the use or fitting of any Soft Starter, users and installers in European countries must comply with the EMC Directive 89/336/EEC. The manufacturer of the soft starter has a statutory obligation to provide a guide for compliance with this directive. For VMX-synergy™, this guidance is given in the EMC guide which is section 9 of this manual. It is essential that users and installers understand and comply with the requirements described in these sections.

7. Applications (continued)

Fuses

Circuit protection fuses should be rated at twice the motor rated current for normal low inertia applications. See also section 8.2.2 relating to high inertia loads. Semiconductor fuses are available for the short circuit protection of the thyristors in VMS-synergy™. See section 2.5 of the Electrical Installation manual for Semiconductor fuse recommendations and details of the Overload incorporated into VMX-synergy™.

Rules for Specific Applications

In-Delta Operation

The VMX-synergy™ control system allows the soft-start to be installed "in the delta" connections of the motor, which can permit the use of a lower current rated unit. However, in this mode of operation, it is important that the soft start is connected in accordance with the relevant wiring diagram. The connection diagram in Section 2.9 of the Electrical Installation manual gives detailed instruction for this configuration. If motor rotation is incorrect, the connections should be changed as detailed in Section 2.9. It should be noted that six connections are required between the motor and soft-start. The Firing Mode parameter (Advanced Menu) must be set to delta mode which also disables the optimising.

High Inertia Loads

High inertia loads such as centrifugal and axial fans, grinders, flywheel presses, etc., may require a larger size of soft-start than the motor. For example, a 75kW starter may be needed for a 55kW motor. This is necessary due to the extra heat produced by the thyristors due to the extended start times and/or higher over-currents. If very high inertia loads are involved, then an analysis of the starting characteristics should be made. This will require accurate data about the motor speed-torque and speed-current characteristics as well as the load characteristics. For further information, consult your supplier. Consideration must also be given to thermal overload and fuse protection systems when extended start times are involved. This must be as for heavy duty starting, as a standard thermal overload will trip under these conditions. A heavy-duty start thermal overload or an electronic overload with dual settings for start and run is recommended. Modern HRC motor fuses will allow for some overload during the start, but the fuse curve, giving time/current data, will give an indication of suitability for the particular application.

Frequent Starting

High starting frequencies require careful consideration of the soft-start thermal capabilities. In many cases a standard sized VMX-synergy™ may be suitable as start times are generally shorter for this type of application. If this is not the case, then a larger soft-start may be required (please refer to Motortronics UK for further information).

iERS

Drives which operate for long periods of time at less than 35% of their rated capacity can benefit from the energy saving function (iERS optimising) of VMX-synergy™ which will adjust the thyristor triggering to reduce the excitation losses of the motor. This will lower the running temperature of the machine and help to extend its life.

Soft-Stopping

Soft-stopping can reduce positive surge pressures in pipelines on shutdown. It is necessary to make sure that the ramp-down time is long enough to remove the energy from the fluid before the firing of the thyristors is stopped, otherwise the surge pressure may still be present. Soft-stopping can also be successfully applied to loads such as conveyer belt systems where sensitive items such as bottles are being transported.

7. Applications (continued)

Reversing Configuration

VMX-synergy™ soft-starters used in conjunction with contactor controlled reversing and plug-braked motors show considerable benefits to the user by reducing mechanical and electrical stresses, particularly when utilising the current limited start feature. It is required, with this type of application, to insert a 150 to 350 millisecond delay between the opening of one contactor and the closing of the other, to allow any residual flux in the rotor to die away. See section 2.9.3 for details.

Replacement of Fluid Couplings

Soft-starters can replace fluid couplings yielding benefits of higher efficiency running and lower costs to the user. If the coupling is used to magnify the available breakaway torque, it may be necessary to replace the fitted motor with another of a larger size or one with a high starting torque characteristic before a soft-start can be employed.

Two-speed Motor Applications

Two speed motors, whether Dahlander connected or with dual windings, can be soft started at each speed, provided that the start is initiated when the actual motor speed is less than the synchronous speed for the winding selected. This is particularly important when changing from high to low speeds.

Multiple Motor Starting

See section 2.9.4 of the Electrical Installation chapter for details.

Overhauling Loads

Certain applications can over-speed the motor as part of normal operation. Power flow is then from the motor to the supply. It is important that the optimising is disabled during the over-speed condition and reinserted during normal conditions.

7. Applications (continued)

Application Table

The table on the following page shows many common motor applications that suit the VMX-synergy™ soft-starter. It lists typical breakaway torque requirements as a percentage of motor full-load torque (FLT). For the most satisfactory soft-start in a given application, the motor should have a full-voltage locked-rotor-torque (LRT) that is at least twice the breakaway torque (e.g. For a reciprocating compressor the FLT is normally in the region of 50% motor LRT). As a general rule, the higher the motor LRT is above the load breakaway torque, the greater the control over the starting process.

Table 8.2.1– Applications

Application	Breakaway Torque (%FLT)	Remarks
Agitator	35	–
Air compressor- rotary, unloaded start	25–35	–
Air compressor- reciprocating, unloaded start	50–100	–
Air compressor- screw type, unloaded start	30	Usually two-pole motor
Ball mill	30–50	Eccentric load, needs high starting torque motor
Carding machine	100	Often high inertia
Centrifuge	50–90	Usually high inertia
Centrifugal fan- dampers closed	10–25	Usually high inertia
Centrifugal fan- dampers open	10–25	Usually high inertia, very long ramp times
Centrifugal blower- valve closed	25–35	–
Centrifugal blower- valve open	30–40	Can have long ramp time
Conveyor- horizontal, unloaded	10–50	–
Conveyor- horizontal, loaded	100–150	–
Conveyor- vertical lifting, unloaded	50–85	–
Conveyor- vertical lifting, loaded	100–175	–
Conveyor- vertical lowering, unloaded	10–40	–
Conveyor- vertical lowering, loaded	10–25	–
Crusher (not rock)- unloaded	25–75	Can be high inertia
Drilling machine- unloaded	10	–
Fan, axial-flow propeller	20–40	–
Feeder- screw	100–175	Needs high starting torque motor
Feeder- vibrating, motor driven	100–150	Needs high starting torque motor
Grinder- unloaded	10–25	Usually high inertia
Hammer mill	20–125	Eccentric load, needs high starting torque motor
Mills- flour etc.	30–50	–
Mixer- dry contents	35–75	–
Mixer- fluid contents	10–40	–
Mixer- plastic contents	75–125	High torque motor offers advantage
Mixer- powder contents	75–125	High torque motor offers advantage
Pelletizers	50–100	–
Press, flywheel	50–150	Needs high starting torque motor
Pump- centrifugal	10–25	Soft stopping useful
Pump- positive displacement, piston type	100–175	Needs high starting torque motor
Pump- vane type, positive displacement	100–150	Needs high starting torque motor

7. Applications (continued)

Table 8.2.1– Applications (continued)

Application	Breakaway Torque (%FLT)	Remarks
Rolling mill	30–50	–
Saw, band	10–35	–
Saw, circular	25–50	May be high inertia; Plug brake may be useful
Screen, vibrating	30–60	–
Transformers, voltage regulators	Nil	Change firing mode
Tumblers	30–100	Can be eccentric load, may need high torque motor

Concepts and principles of fixed-speed induction motor starting and control

Since it's invention one hundred years ago, the standard 3-phase induction motor has become one of the most familiar items of industrial equipment ever known. Due to its simplicity of construction, low cost, reliability and relatively high efficiency, it is likely to remain the prime source of mechanical energy for the foreseeable future.

Introduction

Energy conversion, from the electrical supply to rotating mechanical energy, is a characteristic of all motors. To regulate energy flow, most motor circuits require a mechanism to connect and disconnect them from their electrical power source; electro-mechanical switches, known as 'Contactors', are the standard means of achieving this control. Even today, more than one hundred years after their introduction, contactor-based systems remain the most widely used method of motor control. Nevertheless, there is a definite trend towards more sophisticated electronic systems of control being applied to fixed-speed motor drives. This section will discuss these newest forms of control - namely, electronic, microprocessor-controlled, optimising soft-starters such as VMX-synergy™.

Note: Since there is a wealth of detailed literature available in the technical press, it is not proposed to dwell too heavily on the specifics of realising the electronic control system, but rather, to offer an outline of its various capabilities.

The Induction Motor

In order to appreciate the benefits of using an electronic controller, it is important to have some understanding of the characteristics and limitations of the induction motor and the electro-mechanical systems currently used to control them. The standard, fixed-speed induction motor fulfils two basic requirements:

- To accelerate itself and its load to full speed (or speeds with multi-speed motors).
- To maintain the load at full speed efficiently and effectively over the full range of loadings.

Due to the constraints of materials and design, it can be difficult to achieve both objectives effectively and economically in one machine. So, how does a motor start in the first place? As mentioned earlier, motors convert electrical energy drawn from the power supply into a mechanical form, usually as a shaft rotating at a speed fixed by the frequency of the supply. The power available from the shaft is equal to the torque (moment) multiplied by the shaft speed (rpm). From an initial value at standstill, the torque alters, up or down, as the machine accelerates, reaching a peak at about two thirds full speed, finally to become zero at synchronous speed.

7. Applications (continued)

The Induction Motor (continued)

This characteristic means that induction motors always run at slightly less than synchronous speed in order to develop power - the 'slip speed' and, hence the term asynchronous. The following graph is of an induction motor torque/speed curve and illustrates this most important characteristic.

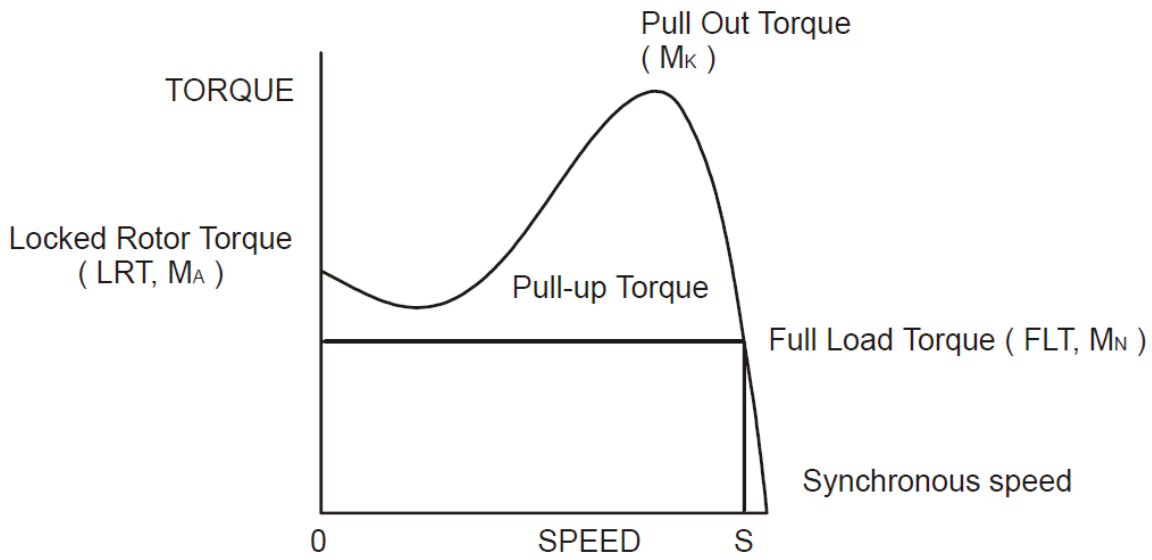

Torque/Speed Curve – Induction Motor

As for each type of motor, so each load coupled to an induction motor has its own speed/torque curve:

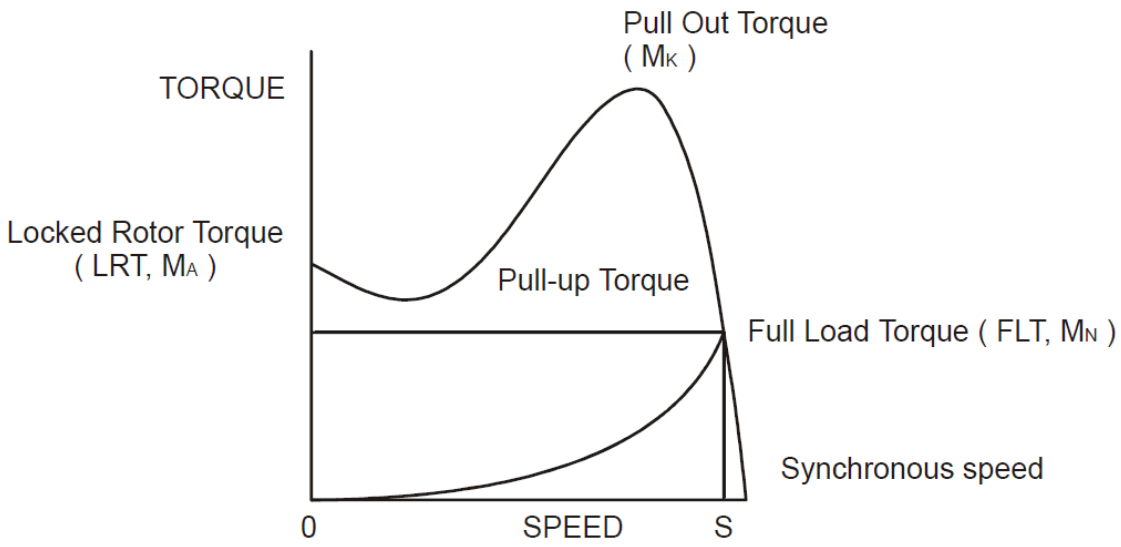

Torque/Speed Curve – Coupled Load

7. Applications (continued)

The Induction Motor (continued)

The acceleration of a motor-load system is caused by the difference between the developed torque (motor) and the absorbed torque (load), and is shown by the shaded area in the next figure:

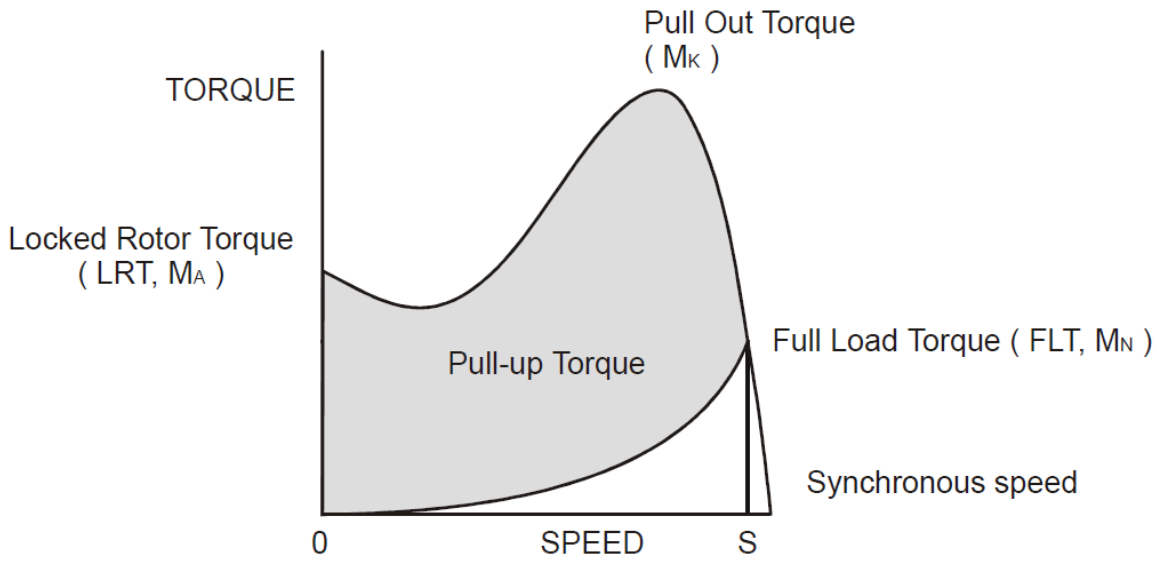

Torque/Speed Curve – Accelerating Torque

Obviously, the larger the difference, the faster the acceleration and the quicker full speed is reached - and, coincidentally, the greater the stresses experienced by the supply and drive systems during the acceleration process. An “ideal” start would accelerate the load with just sufficient force to reach full speed smoothly in a reasonable time, and with minimum stress to the supply and drive mechanisms.

Broadly speaking, the motor speed/torque characteristic is controlled by the rotor resistance - a motor with high rotor resistance can generate its peak torque (pull-out torque) at standstill giving the high break-away torque characteristic, which reduces steadily as the speed increases and becoming zero at synchronous speed. At the other end of the scale, a motor with a very low rotor resistance will produce a low starting torque but will generate its peak torque closer to the synchronous speed. Consequently, this type of motor runs at full power with higher operating efficiency and low slip speed. It is possible to combine the twin requirements of high starting torque and efficient full-speed operation within a single motor by techniques such as double-cage or deep bar design, and this, usually, is the motor characteristic chosen for lifting and hoisting applications:

(see over)

7. Applications (continued)

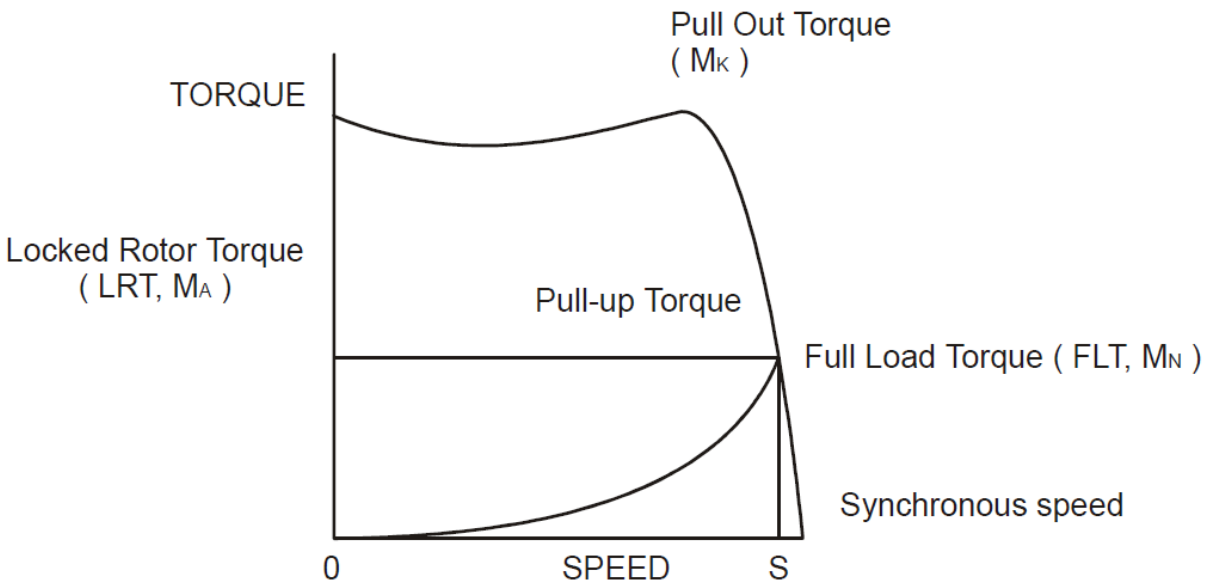

Torque/Speed Curve – High Starting Torque

However, most induction motors are designed to have a "standard" characteristic that provides a compromise between starting torque and operating efficiency. To summarise, an induction motor will only start and accelerate when it produces more torque than the connected load absorbs. This is true for all speeds - including standstill and full speed.

Starting Induction Motors

Starting a de-magnetised induction motor from standstill is a demanding and complex process. At the instant of switching all the energy necessary to magnetise the motor, to provide the acceleration force, and to supply the kinetic energy of the rotor and load, must be present together with the energy to overcome the mechanical and electrical losses. To do so at full supply voltage places considerable stresses on the supply, the motor windings, and the iron cores of the stator and rotor. Excessive acceleration of a rotor when the mechanical load is small can produce torque oscillations in the shaft causing severe wear to transmissions, gears and drives. Excessive acceleration when the load inertia is high such as in centrifugal fans, causes belts to slip in the pulleys, producing rapid wear and early failure.

Electro-Mechanical Methods of Starting

Method A: Direct-on-Line

The most simple means of controlling energy flow to an induction motor is to interrupt the power supply by a single, solenoid operated, 3-phase switch, known as a contactor. Very widely applied, the method is known variously as "direct-on-line", "across-the-line", "direct" etc., and is the usual form of control where low cost is the first, and most important consideration. As a result, it is most often used on small motor sizes (up to approx. - 22kW), or where the supply is strong enough to withstand the inrush and starting current surges without causing unacceptable voltage drops.

The harsh, damaging effects described earlier are all imposed by direct-on-line starting and, as a control method, it is the most destructive of equipment. Its simplicity and apparent low cost, although attractive at first sight, hide large cost penalties in the shape of increased maintenance, reduced transmission equipment life and higher risk of motor failure, particularly when frequent starting and stopping is needed. In larger sized motors special strengthening is necessary, at higher cost, before they can be safely used with direct-on-line starting. However, the shortcomings of the direct-on-line starter have been recognised ever since motors have been used and alternative systems have been developed over the years to reduce the damaging effects of this form of control.

7. Applications (continued)

Method B: Star-Delta and other Reduced Voltage Starting Systems

Reduced voltage starting makes use of the fact that motor torque is proportional to the square of the terminal voltage; the most familiar type of reduced-voltage starter is the star-delta starter. Consisting of three contactors and a time switch (which can be mechanical, pneumatic, electrical or electronic), the star-delta starter changes the motor winding configuration from an initial star connection to a delta as the motor accelerates. The change-over or transition point is controlled by the time switch and is usually arranged to be approximately at 80% of full speed. The effect of starting in star is to alter the voltage across each stator winding to 58% of normal. This reduces the starting torque to a third of locked rotor torque (LRT) with a consequent reduction in starting currents and acceleration forces.

Although an apparent improvement over the direct system, significant disadvantages still remain. The transfer from star to delta momentarily removes the motor from the supply. During this time the motor is under the mechanical influence of the rotating load and, at the instant of disconnection, current will still flow in the rotor bars due to the time delay necessary for the magnetic flux to die away. Therefore, there is a residual flux “frozen” on the surface of the rotating rotor, which cuts the stator windings, generating a voltage whose frequency depends on the rotor speed. If the load inertia is small, such as in a pump, or if the friction is high, there could be a significant loss of speed during the time the supply is disconnected.

In this case, when the reconnection to delta is made, a large phase differential can exist between the supply and the rotor fluxes. This can give rise to very large current surges (as much or more than full-voltage locked rotor current), together with massive transient torque oscillations, which can peak at levels in the region of fifteen-times full-load torque. Although the effects described are only present for a very short period of time (about one fifth of a second), they are sources of great stress and damage to the whole drive system, and where frequent starting is necessary, invoke high maintenance costs. The current surges, in the form of a very high level short duration “spikes”, are an increasing problem in these days of computer control systems and other “sensitive” electronic equipment. The voltage disturbance on the supply is very difficult to filter out and can cause severe problems, especially when larger motors are involved.

There are methods of control, for example, the Wauchope starter, which eliminate or reduce the reconnection transients. However, such starters are expensive and have reliability implications; for these reasons they are not widely applied.

The star-delta starter also has disadvantages due to the restricted starting torque available (if you need 40% LRT to break-away, you can only increase the motor size, or revert to direct-on-line). Combined with the severe effects of the re-switching surges, and the additional costs of bringing six conductors from the motor to the starter instead of only three, star-delta only offers an imperfect solution to the problem of starting the induction motor.

Method C: Primary Resistance Starter

It has long been recognised that the transition step in the star-delta system was a source of problems such as welded contactors, sheared drive shafts etc., and for many years a method of stepless control has been available in the form of the primary resistance starter. This type of controller inserts a resistance in one, or more often in each, of the phase connections to the stator at start-up, after which it is progressively reduced and shorted out at the end of the acceleration process. Frequently, the resistances are movable blades that are gradually inserted into an electrolyte liquid. The mechanism is usually large and expensive, both to purchase and to maintain, and considerable heat is created by the passage of current through the electrolyte resistor. This limits the starting frequency (because the electrolyte has to condense back to liquid before a new start can proceed), and these restrictions prevent this starter from being a popular option when selecting a control system. However, it has the distinction of being the smoothest and least stressful method of accelerating an induction motor and its load.

7. Applications (continued)

Method D: Other Electro-Mechanical Systems

Other control methods such as auto-transformer starting (popular in North America), primary reactance starting etc., are employed to a greater or lesser extent, to compensate for some of the disadvantages of each type of starter discussed. Nevertheless, the fundamental problems of electro-mechanical starters remain, and it is only in the last decade or two that their dominance has been challenged by the introduction of power semiconductors controlled by electronics.

The Semiconductor Motor Controller

During the 1950's, much effort was put into the development of a four-layer transistor device which had the power to switch large currents at high voltages when triggered by a very small pulse of current. This device became known as the silicon controlled rectifier (SCR), or in Europe, the 'Thyristor'; it is the basis on which all soft starting systems are built. The characteristic of most interest is the ability of the thyristor to switch rapidly (in about 5 millionths of a second) from "OFF" to "ON" when pulsed, and to remain "ON" until the current through the device falls to zero, - which conveniently, happens at the end of each half-cycle in alternating current supplies.

By controlling the switch-on point of a thyristor relative to the voltage zero crossing in each half wave of an alternating current, it is possible to regulate the energy passing through the device. The closer the turn-on point is to the voltage zero crossing point, the longer the energy is allowed to flow during the half-cycle. Conversely, delaying the turn-on point reduces the time for the energy to flow. Putting two thyristors back-to-back (or anti-parallel) in each of the phase connections to a motor, and by precisely controlling their turn-on points, an electronic soft starter continuously adjusts the passage of energy from the supply so that it is just sufficient for the motor to perform satisfactorily.

So, for instance, by starting with a large delay to the turn on point in each half cycle, and progressively reducing it over a selected time period, the voltage applied to the motor starts from a relatively low value and increases to full voltage. Due to the motor torque being proportional to the square of the applied voltage, the starting torque follows the same pattern giving the characteristic smooth, stepless start of the soft-starter.

Running Induction Motors

Once a start has been completed the motor operating efficiency becomes of interest. When working at or near full load, the typical 3-phase induction motor is relatively efficient, readily achieving efficiencies of 85% to 95%. However, as shown below, motor efficiency falls dramatically when the load falls to less than 50% of rated output.

7. Applications (continued)

Running Induction Motors

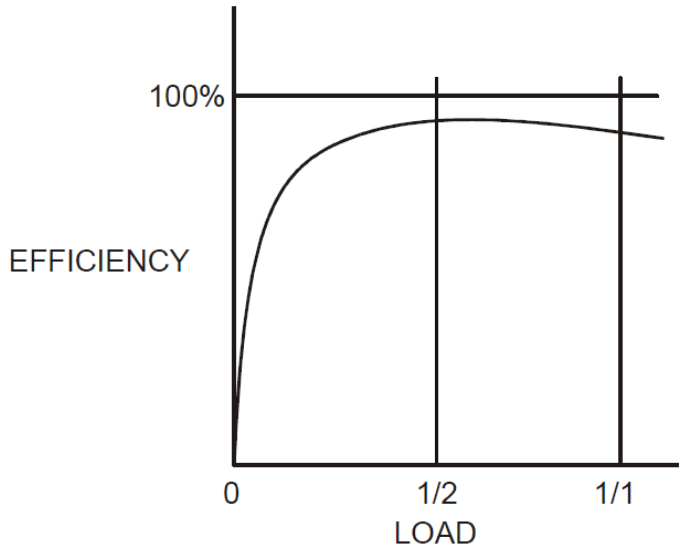

Motor Efficiency/Load Characteristic

In fact, very few motors actually experience consistent fully rated operation, the vast majority operate at much lower loads due to either over-sizing (a very frequent situation), or natural load variations. For Fan and Pumping applications, the affinity laws will allow the inverter drive to show very considerable energy savings over virtually all other methods of control through varying the speed of the motor in response to changes in load. Where motor speeds cannot be varied, an optimising version of semiconductor motor controller, such as VMX-synergy™ will also produce energy savings in lightly loaded motors. Less sophisticated systems of soft-starter remain at full conduction and the motor then behaves as if it were connected directly to the mains supply. However, at light loads and mains voltages, induction motors always have excess magnetic flux, and efficiency loss and power factor degradation result. By detecting the load at any instant, and adjusting the motor terminal voltage accordingly, it is possible to save some of the excitation energy and load loss and improve motor power factor when the motor is running inefficiently at light loads.

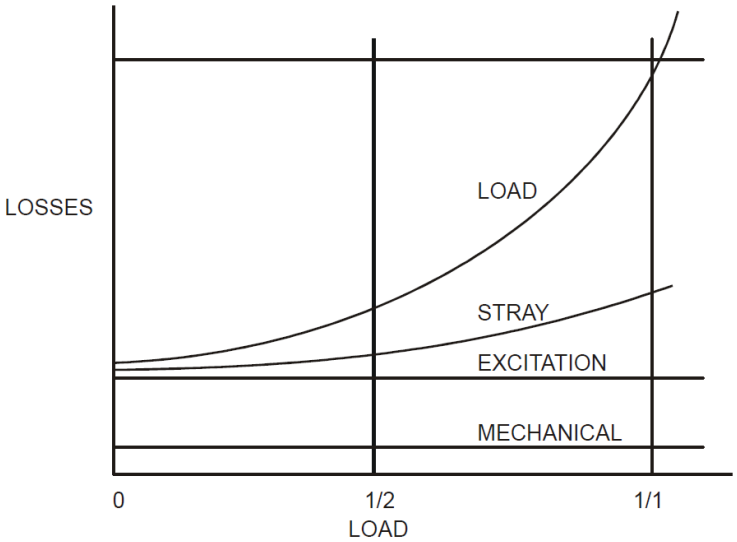

Motor Efficiency/Loss Characteristic

7. Applications (continued)

Running Induction Motors (continued)

All VMX-synergy™ soft-starters are microprocessor controlled, and this gives them a number of advantages. Firstly, there are no adjustments to be made for the energy saving function: all calculations necessary to find the best degree of phase-back of the thyristors for any load condition is made by the microprocessor. Secondly, the start always synchronises with the supply voltage and a special structure of turn-on pulses virtually eliminates the inrush currents normally associated with motor start-up; this happens every time. Lastly, there is the absolutely stepless starting process, found only with the primary resistance or reactance electromechanical starters - but without the wasted energy, and with the opportunity to control the maximum current allowed to flow during the starting process. Other features such as soft stopping are included to give considerable control over all modes of induction motor operation.

Reliability Considerations

An aspect of electronic controllers for induction motors which is of increasing concern is that of reliability. There is little point in installing an expensive item of electronic equipment to save potentially considerable amounts of money if the device is unreliable to the point that vital processes are constantly interrupted.

There are electronic products in the marketplace which appear to offer soft starting cheaply. They almost always rely on less advantageous technologies such as analogue control, or half-control, where one of the two thyristors in each phase is replaced with a diode. There are systems which only control the energy flow in one phase while the other two are directly connected. Owing to the variable quality and performance of many so-called inverters and soft-starters available to the unsuspecting purchaser, international standards for these products have been developed.

So far, IEC 60947-4-2 - 'AC Semiconductor Motor Controllers and Starters' defines the soft starter in every important respect, including thermal and overload performance as well as electromagnetic compatibility. By ensuring that any motor controller equipment purchased conforms to IEC 60947-4-2, a user should be reasonably safeguarded from shoddy or inadequate products when specifying equipment for future installations. A particular advantage of the use of the optimising soft starter is its impact on the maintenance requirements of associated electro-mechanical equipment. Optimising lowers the surface temperature of the motor by reducing the losses within the motor. This prolongs the motor life - and reduces heating of the surrounding atmosphere in the process. If the atmosphere is subject to air conditioning, reducing the heat input will reduce the air conditioning costs. Reduced starting and running currents reduces cable losses and, contactor switching operations are carried out under the most advantageous conditions. No current flows on switch-on since all switching is carried out by the thyristors - virtually eliminating the need for contact replacement.

Indeed, there are a growing number of installations where contactors are no longer employed, being replaced by controllable circuit breakers or isolators instead.

In summary, electronic controllers for most fixed-speed applications are opening new ways of increasing the efficient operation of induction motors, as well as offering significant benefits in control. Intending users need to ensure themselves of the quality and performance of any products they expect to fit, and this can be reasonably expected if compliance with the appropriate IEC standards is demanded.

Blank Page

A1. Soft Starter Sizing

Introduction

VMX-synergy™ provides full motor overload protection, configurable through the user interface. Overload trip settings are determined by the Motor Current setting and the Trip Class setting. Trip class choices are Class 10, Class 20, and Class 30. The VMX-synergy™ soft starters are protected using full I^2T motor overload with memory.

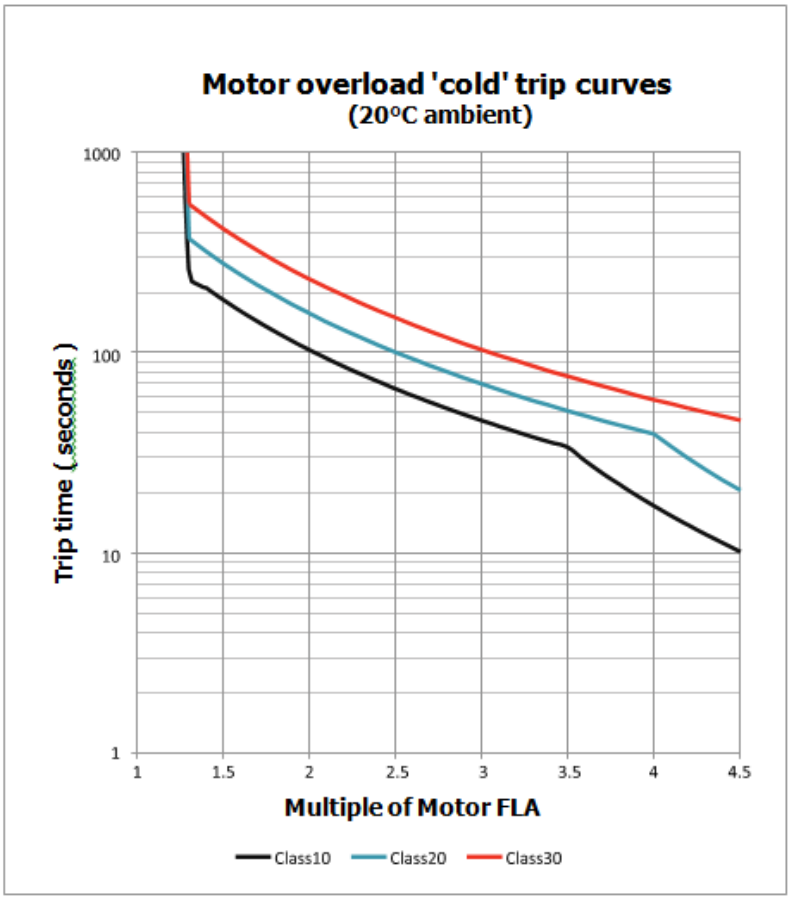

A1. Soft Starter Sizing (continued)

Index Rating

VMX-synergy™ Index Ratings*		
Model Number	**I_e (A)**	**Standard Operation AC-53a; X-Tx; F-S**
VMX-SGY-101 to VMX-SGY-205	17 to 195	AC-53a: 3.5-17; 90-5
VMX-SGY-301 to VMX-SGY-309	242 to 500	AC-53a: 3.5-17; 90-3
VMX-SGY-401 to VMX-SGY-505	610 to 1080	AC-53a: 3.5-17; 60-3
* Index ratings AC-53a and AC-53b are specified by IEC standard # 60947-4-2. IEC Index Ratings are comprised of Rated Operational Current (I_e), Utilization Category, Overload Current Profile (X-Tx), and Duty Cycle (F-S) or OFF-time.		

Index Rating Example – Standard Operation (AC-53a Utilization Category per IEC 60947-4-2)

17 to 195 - AC-53a: 3.5-17;90-5

- Duty Cycle (F-S)
  90-5 = 90% duty cycle - 5 cycles/hr
  [if multiple starts/hr are required, 90% D.C. requires off time ≥ 10% of previous run time]
- Overload Current Profile (X-Tx)
  3.5-17 = 3.5 times rated current (Ie) for 17s
- Utilization Category
  AC-53a = controller semiconductors provide squirrel-cage motor Start, Run, and Stop control
- Rated Operational Current (Ie)
  17 to 195 = controllers with Rated Operational Currents from 17A to 195A

Standard Overload Current Profile and Duty Cycle

VMX-synergy™ has been designed for a specific Overload Current Profile and Duty Cycle as shown in the previous VMX-synergy™ Index Ratings section of this chapter.

The Overload Current Profile is expressed by two symbols, X and Tx.

X denotes the overload current as a multiple of I_e and represents the maximum value of operating current due to starting, operating, or manoeuvring under overload conditions.

For example, X = 3.5 means that the maximum overload start current allowed is 3.5 times FLC.

Tx denotes the duration of the controlled overload currents during starting, stopping, operating, or manoeuvring.

For example, Tx = 17 means that the maximum allowed overload current is permitted for up to 17 seconds only.

The Duty Cycle is expressed by two symbols, F and S which describe the duty and also set the time that must be allowed for cooling.

F is the ratio of the on-load period to the total period expressed as a percentage.

For example, F= 90 means that the soft starter is ON for 90% of the time and then OFF for 10% of the time between each start.

If there are not multiple starts per hour, then the Duty Cycle is continuous.

S is the number of starts or operating cycles per hour.

For example, S = 5 means that the soft starter is capable of 5 equally spaced starts per hour.

These characteristics are summarized in the Figure overleaf.

A1. Soft Start Sizing(continued)

Standard Overload Current Profile and Duty Cycle (continued)

Standard Overload Current Profiles and Duty Cycles					
Model	*Rated Current (A)*	*Class 10 O/L Multiple (X)*	*Class 10 O/L Time (Tx)*	*Starts/Hour (S)*	*Duty (F)*
VMX-SGY-101	17	3.5	17	5	90%
VMX-SGY-103	22				
VMX-SGY-105	29				
VMX-SGY-107	35				
VMX-SGY-109	41				
VMX-SGY-111	55				
VMX-SGY-113	66				
VMX-SGY-115	80				
VMX-SGY117	100				
VMX-SGY-201	132				
VMX-SGY-203	160				
VMX-SGY-205	195				
VMX-SGY-301	242			3	
VMX-SGY-303	302				
VMX-SGY-305	361				
VMX-SGY-307	430				
VMX-SGY-309	500				
VMX-SGY-401	610				
VMX-SGY-403	722				
VMX-SGY-501	850				
VMX-SGY-503	960				
VMX-SGY-505	1080				

A1. Soft Start Sizing(continued)

Sizing Chart

Step 1 - Select the application from the list and follow that column down.	Typical Applications	Standard Duty	Medium Duty	Heavy Duty
		Agitator	Compressor - Centrifugal	Crusher
		Compressor - Rotary Vane	Compressor - Reciprocating	Shredder
		Compressor - Scroll	Compressor - Rotary Screw	Wood Chipper
		Bow Thruster - Zero Pitch	Ball Mill	Fan - High Inertia >85A
		Fan - Low Inertia	Bow Thruster - Loaded	
		Feeder - Screw	Conveyor - Loaded	
		Lathe Machines	Grinder	
		Moulding Machine	Hammer Mill	
		Plastic and Textile Machines	Mills - flour etc.	
		Pump - Submersible	Mixer - Loaded	
		- Centrifugal	Pelletizers	
		Pump - Submersible	Press, Flywheel	
		- Rotodynamic	Positive Displacement Pump	
		Saw - Band	- Reciprocating	
		Transformers	Positive Displacement Pump	
		Voltage Regulators	- Rotary	
			Pump Jack	*For centrifuges make selection at I(A) = motor FLA x 2.3*
			Rolling Mill	
			Roots Blower	
			Saw - Circular	
			Screen - Vibrating	
			Tumblers	
Step 2 - Confirm the rated starting capability of the soft start against the application.	Trip Class	Trip Class 10	Trip Class 20	Trip Class 30
	Rated Starting Capability	3x Motor Current - 23secs	4x Motor Current - 19secs	4x Motor Current - 29secs
		3.5x Motor Current - 17secs		
	Max Starts per Hour	5 starts/hour	5 starts/hour	5 starts/hour
		or 3 starts/hour	or 3 starts/hour	or 3 starts/hour
Step 3 - Consider the operating environment and make the model selection on a higher horsepower rating.	Height Above Sea Level	Standard operating height is 1000m, for every 100m increase motor Amps/kW/HP by 1%, up to 2000m.		
		Example: For a 100A motor at 1500m make model selection based on 105A (5% higher)		
	Operating Temperature	Standard operating temperature is 50degC, for every 1degC above, increase motor Amps/kW/HP by 4%, up to 60degC.		
		Example: For a 100A motor at 55degC make model selection based on 120A (20% higher)		
	Increased Starts per Hour	Use our online tool to select the model.		

A1. Soft Start Sizing(continued)

Sizing Chart (continued)

	Motor Rating In Line				Motor Rating In Delta				Select Model	Select Model	Select Model
	400V		460V		400V		460V				
	kW	I_e(A)	HP	I_e(A)	kW	I_e(A)	HP	I_e(A)	5 starts/hour @ 50°C	5 starts/hour @ 50°C	5 starts/hour @ 50°C
Step 4 - Select your motor Voltage and Horsepower and select model.	7.5	17	10	17	15	29	20	29	SGY-101	SGY-103	SGY-105
	11	22	15	21	18.5	38	25	36	SGY-103	SGY-105	SGY-107
	15	29	20	27	22	50	30	47	SGY-105	SGY-107	SGY-109
	18.5	35	25	34	30	61	40	59	SGY-107	SGY-109	SGY-111
	22	41	30	40	37	71	50	69	SGY-109	SGY-111	SGY-113
	30	55	40	52	45	95	60	90	SGY-111	SGY-113	SGY-115
	37	66	50	65	55	114	75	113	SGY-113	SGY-115	SGY-117
	45	80	60	77	75	139	100	133	SGY-115	SGY-117	SGY-201
	55	100	75	96	90	173	125	166	SGY-117	SGY-201	SGY-203
	75	132	100	124	110	229	150	215	SGY-201	SGY-203	SGY-205
	90	160	125	156	150	277	200	270	SGY-203	SGY-205	↓
	110	195	150	180	185	338	250	312	SGY-205	↓	↓
	3 starts/hour @ 50°C				3 starts/hour @ 50°C				3 starts/hour @ 50°C	3 starts/hour @ 50°C	3 starts/hour @ 50°C
	90	160	125	156	150	277	200	270	↓	↓	SGY-301
	110	195	150	180	185	338	250	312	↓	SGY-301	SGY-303
	132	242	200	242	220	419	350	419	SGY-301	SGY-303	SGY-305
	160	302	250	302	300	523	450	523	SGY-303	SGY-305	SGY-307
	200	361	300	361	355	625	500	625	SGY-305	SGY-307	SGY-309
	250	430	350	414	425	745	500	717	SGY-307	SGY-309	↓
	280	500	400	477	500	866	600	826	SGY-309	↓	↓
	3 starts/hour @ 40°C				3 starts/hour @ 40°C				3 starts/hour @ 40°C	3 starts/hour @ 40°C	3 starts/hour @ 40°C
	250	430	350	414	425	745	500	717	↓	↓	SGY-401
	280	500	400	477	500	866	600	826	↓	SGY-401	SGY-403
	355	610	500	590	600	1057	800	1022	SGY-401	SGY-403	SGY-501
	400	722	600	722	710	1251	1000	1251	SGY-403	SGY-501	SGY-503
	500	850	700	840	850	1472	1100	1455	SGY-501	SGY-503	SGY-505
	560	960	800	960	950	1663	1250	1663	SGY-503	SGY-505	-
	630	1080	900	1080	1100	1871	1500	1871	SGY-505	-	-

For In-Delta connections, all six motor wires must be available for connection, and it is critical to exactly follow the In-Delta wiring diagram. Nine-lead motors CANNOT be connected in the delta. The Soft Starter will only sense the Phase Current, which is about 58% of the Line Current.

For In-Delta connections, a main contactor that is controlled by the Run relay of VMX-synergy™ must be used in the incoming power circuit for isolation. Circuit breaker isolation alone is not sufficient.

iERS energy optimizing feature is not available for In-Delta connections.

A2. Glossary of Terms

Breakaway Torque: The minimum torque required to achieve rotor movement for the motor with its load.

Current Limit: The current at which the ramp is held. For VMX-synergy™, current limit is only active during start-up where it contributes to the motor control function. This feature is particularly useful when starting high-inertia loads that require an extended start-up period (see also Overload Level).

Direct-On-Line (DOL): The direct connection and disconnection of a motor from the AC main supply by means of a contactor or switch. Acceleration and operation is at full mains voltage only.

iERS: intelligent Energy Recovery System. An advanced motor control technology proven to reduce the energy consumed in fixed speed motor applications. It matches the power consumption to the load required by intelligently monitoring and regulating energy consumption, voltage, current, and power factor during the motor starting and running stages. iERS automatically bypasses itself when it is not needed and continues monitoring to re-engage itself as needed.

Inrush Current or **Locked Rotor Current**: The current that flows at the instant of connection of a motor to the power source. It is limited by the impedance presented by a de-energized motor and the applied voltage. Usually expressed as a multiple of motor full-load current.

Kick-start Voltage: The percentage of supply voltage applied before commencing ramp-up when a load has a high breakaway torque and the standard settings of pedestal voltage may not allow sufficient torque to be developed by the motor to cause acceleration.

Locked Rotor Current: Same as Inrush Current (defined above).

Overload Level: The level of current at which the controller overload begins to integrate. For VMX-synergy™, the overload detector is always active and provides protection against prolonged over-current operation.

Pedestal Voltage: The voltage that the unit applies to the motor at start-up. It is expressed as a percentage of the rated supply voltage.

Power Factor: The ratio, expressed as a trigonometric cosine, of the real power consumption to the apparent power consumption.

Top of Ramp (TOR): The unit achieves Top of Ramp (TOR) when it completes the start-up stage of motor control (this occurs when the voltage applied to the motor first equals the main supply voltage).

Soft-start: The regulation, by electronic means, of the supply voltage from an initial low value to full voltage during the starting process. This overcomes the inherent drawbacks of a switched supply. The motor torque is modified in proportion to the square of the voltage applied.

Trip: A trip occurs when the unit removes power to the motor because its operation equals the limit imposed by one of its self-protection features.

Blank Page

A3. Updating VMX-synergy™ Firmware

Appendix 3

Introduction

In the event that the VMX-synergy™ unit requires a firmware update, this can be achieved on an installed unit without the need for any additional equipment other than a USB memory stick.

Instruction for Updating

Obtain a USB flash drive and ensure that it has been formatted to FAT32.

Part number USB-KEY is a USB flash drive that has been verified to work with VMX-synergy™. Other flash drives may not physically fit or may not perform correctly. Available to purchase from Motortronics UK.

Download a new firmware zip file from: http://www.motortronics-uk.co.uk/download/synergy-firmware/

Copy the zip file into a suitable location on your PC that you can extract all of the firmware files.

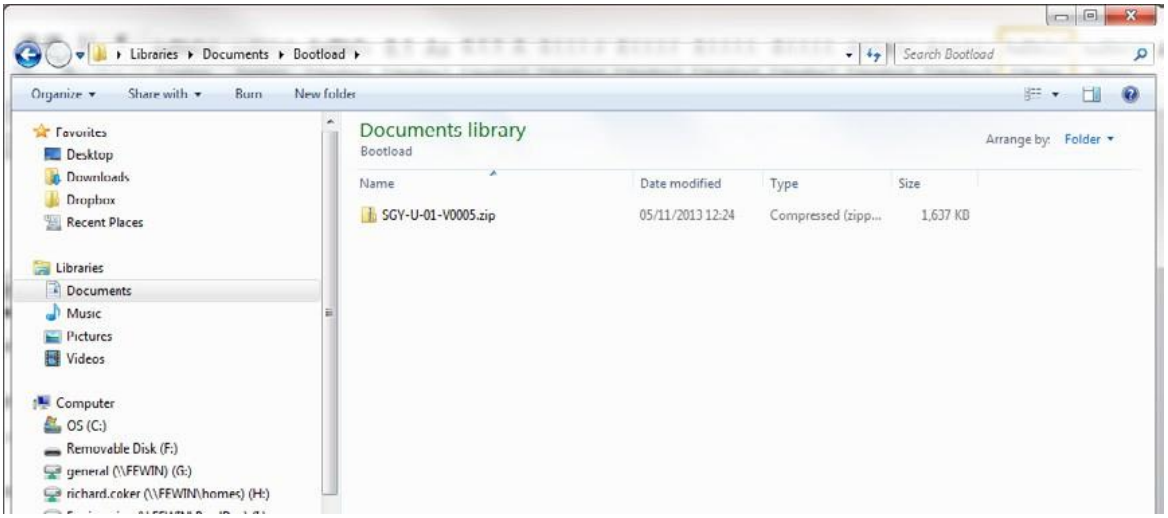

Right click on the zip file and select extract all. This will create an unzipped directory in the same location with the same name.

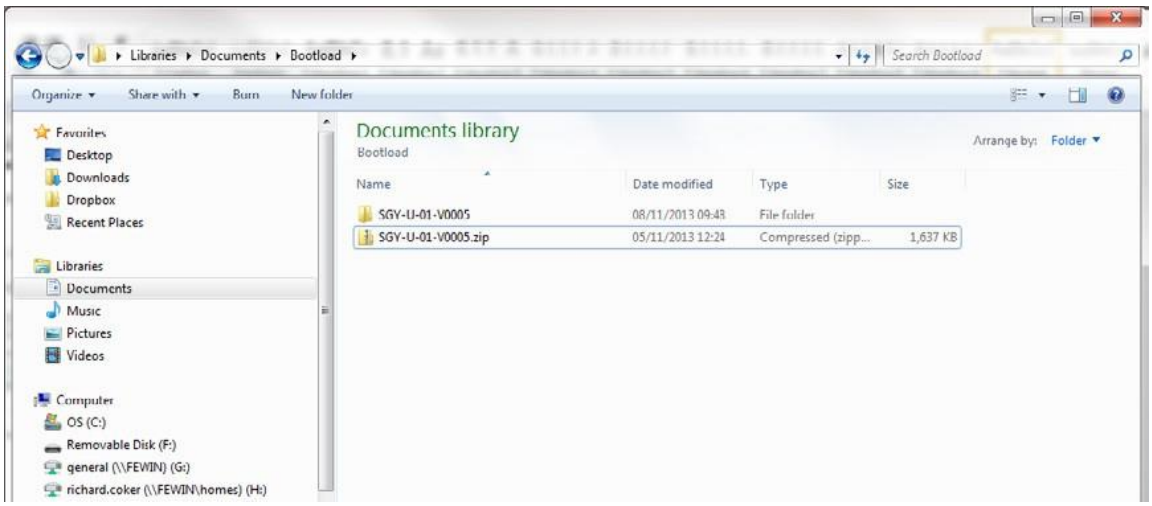

A3. Updating VMX-synergy™ Firmware (continued)

Double click on the new directory to display the unit update files. Select all files and copy them to the root directory of the USB flash drive.

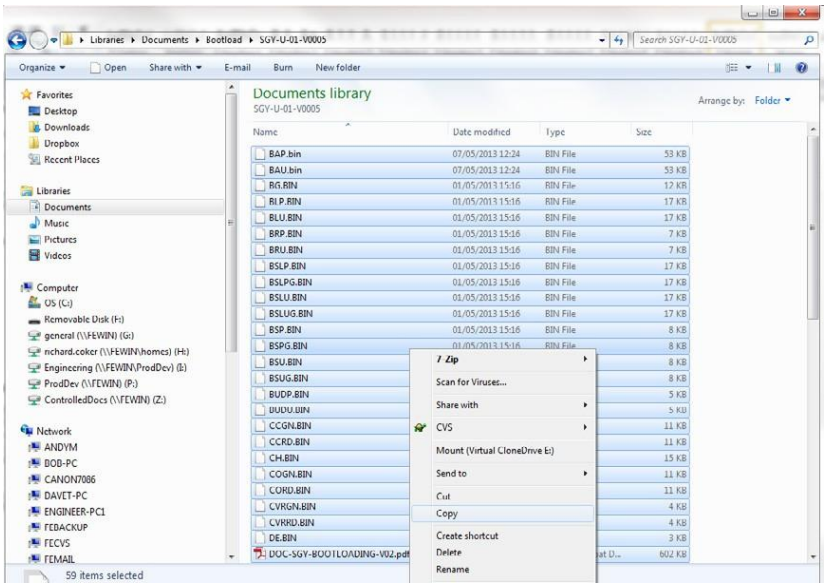

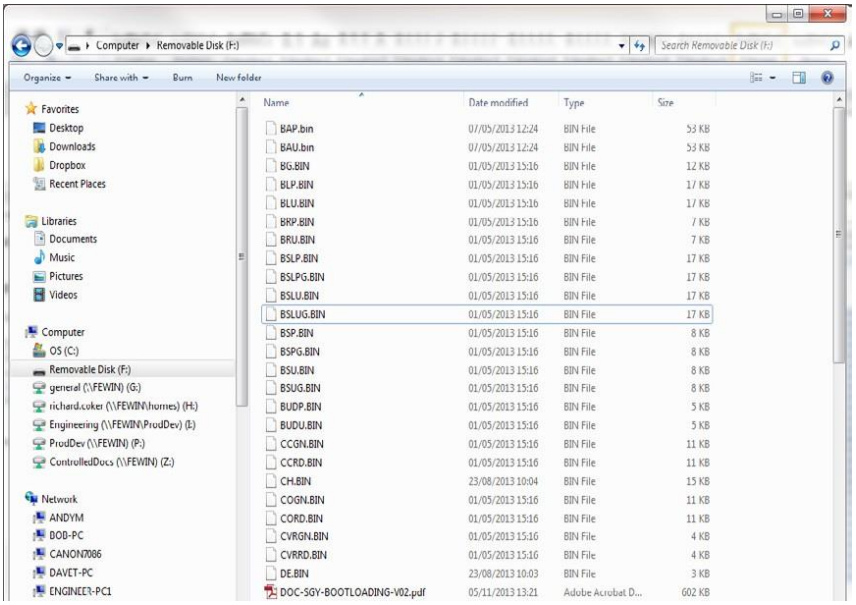

A3. Updating VMX-synergy™ Firmware (continued)

USB Flash Drive

Insert the USB flash drive into the USB connector on the VMX-synergy™ unit.

Use the touchscreen to navigate to the Update Firmware selection button.

Home >> Device >> Update Firmware.

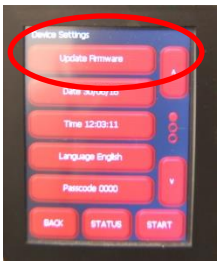

The next screen shows the 'current' installed firmware version and the firmware version previously copied to the USB flash drive.

Depress the Start Firmware Update button.

Confirm the firmware update by pressing YES.

Ensure the VMX-synergy™ unit remains powered during the update process.

Once the firmware files are transferred to the VMX-synergy™ unit, the update process will commence. The update process is a three-step process indicated on the touchscreen.

Once the update is complete, VMX-synergy™ will reboot and display the status screen.

A4. User Serviceable Items

Fan Replacement

Replacement Fan Part Numbers

It is recommended that replacement fans are replaced with original specification fans available from the manufacturer. Alternatives may have inferior performance leading to potential overheating and damage to the VMX-synergy™ unit.

Part numbers for the replacement fans are detailed in the table below:

VMX-synergy™ Replacement Fans		
Part Number	***Description***	***For VMX-SGY-Models***
FAN-002(1)	Cooling fan, replacement, for VMX-synergy™ series soft starters, 60 x 60 x 15 mm	101 thru 117
FAN-003(1)	Cooling fan, replacement, for VMX-synergy™ series soft starters, 80 x 80 x 15 mm	201-203
FAN-014(1)	Cooling fan, replacement, for VMX-synergy™ series soft starters, 80 x 80 x 20 mm	205
FAN-007(1) (2)	Cooling fan, replacement, for VMX-synergy™ series soft starters, 120 x 120 x 25 mm	301 thru 305
FAN-008 (110V)	Cooling fan, replacement, for VMX-synergy™ series soft starters, 171 x 151 x 151 mm	307 thru -309
FAN-009 (230V)	Cooling fan, replacement, for VMX-synergy™ series soft starters, 171 x 151 x 151 mm	307 thru -309

(1) All fans (except FAN-008 and FAN-009) require 4 butt-splice terminals. Part number MIS-017
(2) FAN-007 also require 4 push rivets. Part number MISC652.

Fan Replacement Procedure – VMX-SGY-101 thru VMX-SGY-305

1) Unscrew existing fans

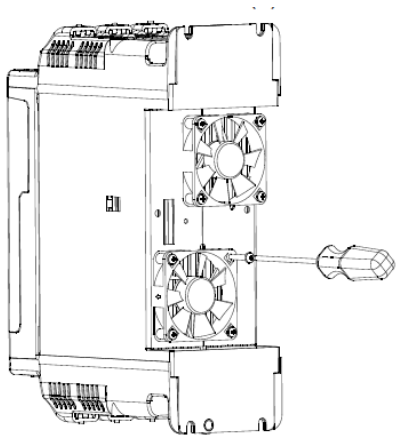

2) Cut wire as close as possible to fan/s

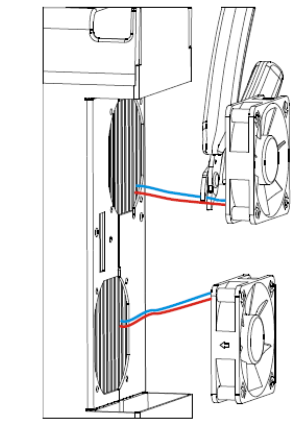

A4. User Serviceable Items (continued)

Fit blue wires from new fan and Synergy into connector

Squeeze with pliers

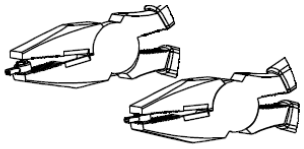

Repeat with second pair of blue. Then 2 pairs of red wires

Position fans and connectors

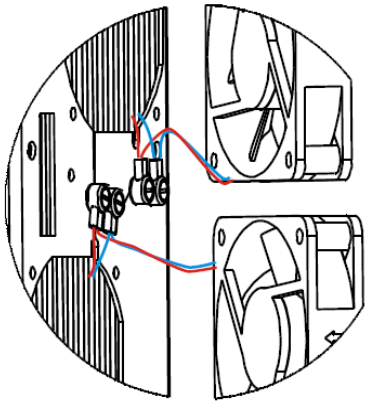

Fix new fan(s) to unit

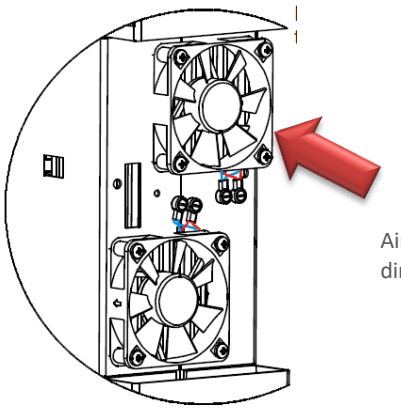

VMX-SGY-301 to VMX-SGY-305 have metal fan guards fitted for safety reasons.

These must be removed before the fans can be taken off. They MUST be refitted using the supplied push rivets after the fans have been attached.

A4. User Serviceable Items (continued)

Fan Replacement Procedure – VMX-SGY-307 and VMX-SGY-309

Remove 4 screws on lower end moulding

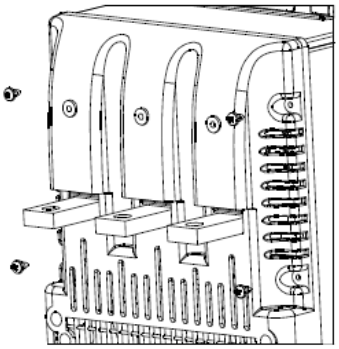

Slide lower end moulding off busbars

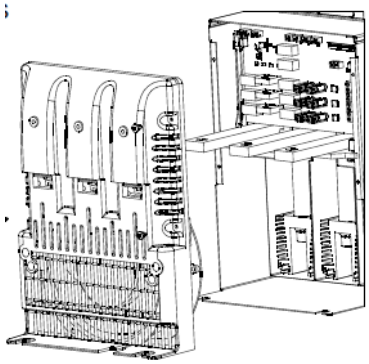

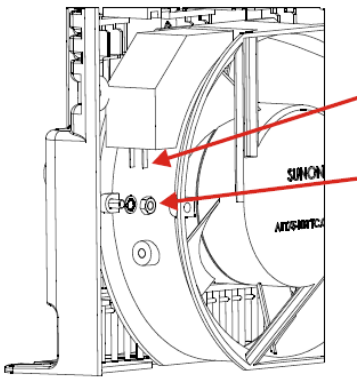

Pull wires off connectors

Fan held with M4 screws in 2 positions

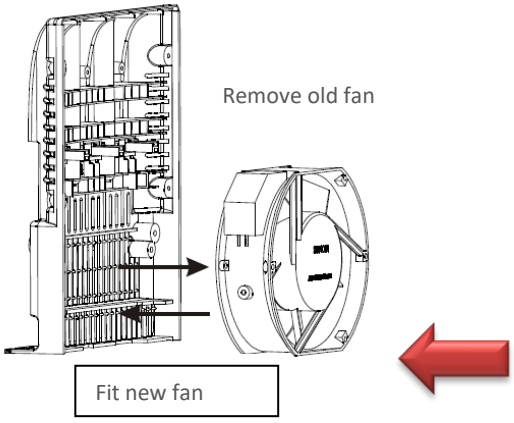

Reassemble in reverse order
Orientation of wires is not critical

Air flow direction

A4. User Serviceable Items (continued)

LCD Touchscreen Replacement

1. Carefully remove the outer bevel casing around the LCD display.	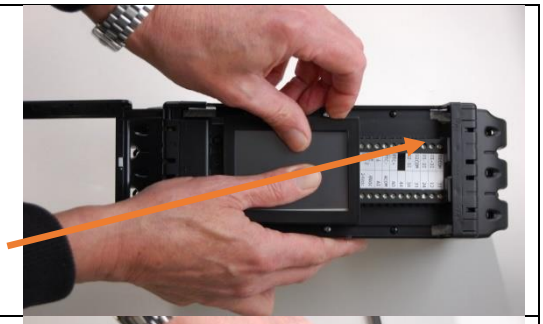
2. Remove the two plastic rivets below the LCD display. Use a small screwdriver to lever the rivets out.	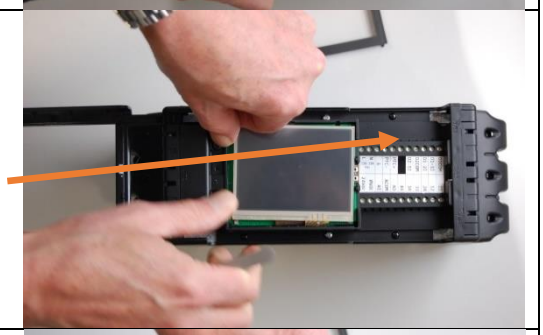
3. When removing the LCD display and PCB, Slowly Lift from the top left corner.	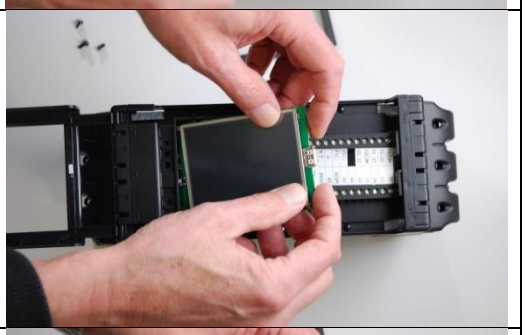
4. Gently remove the LCD and PCB at an angle, so they can be lifted from the unit. Take care not to apply excessive force.	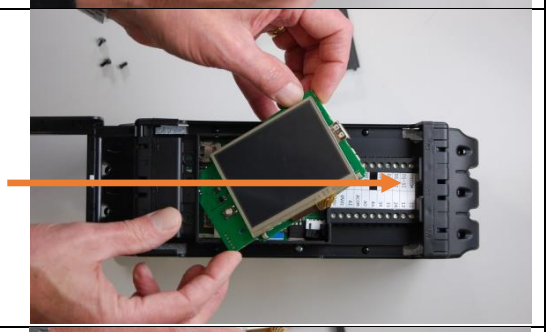
5. On the reverse side of the PCB remove the FFC cable from the socket (lift grey part from front edge, do not force).	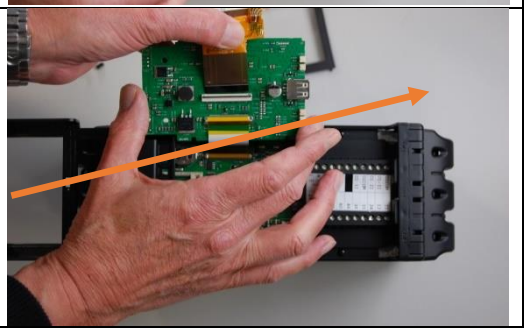

A4. User Serviceable Items (continued)

6. Place the replacement screen FFC cable in socket. Making sure it is correctly seated. Push the grey part down to lock.	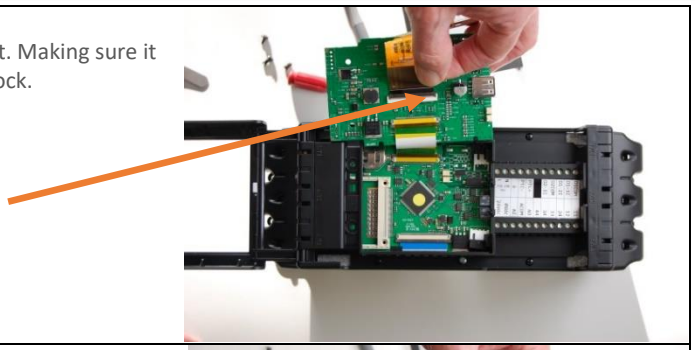
7. Once the socket is locked with the FFC cable firmly connected, gently place the board back into the previous position, using the same angled technique.	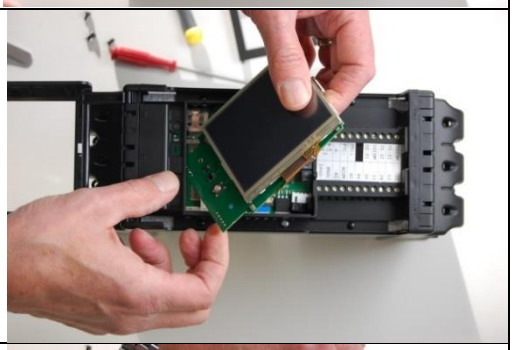
8. Place PCB flat in position.	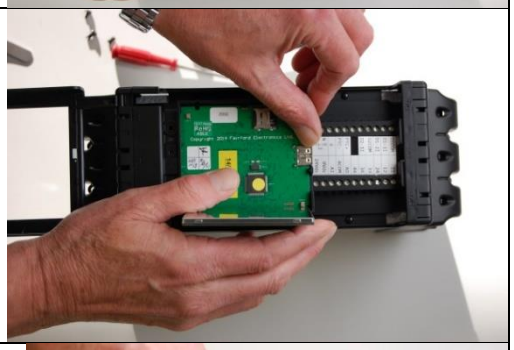
9. Make sure the screen is correctly aligned and outer bevel is placed back on the LCD display.	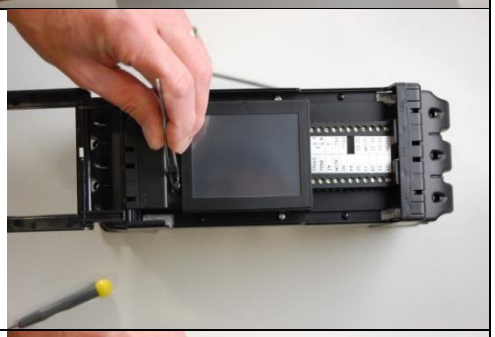
10. Once you have placed the outer bevel back on LCD display. Ensure that the two plastic rivets below the LCD display are re-installed.	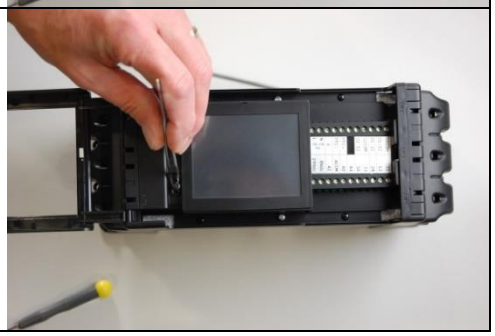

A5. Remote Keypad Setup – VMX-SGY-010

Appendix 5

Introduction

The remote keypad (VMX-SGY-010) can be used to control, monitor and program up to 32 VMX-synergy™ soft starters.

The remote unit is powered from the host VMX-synergy™ and requires only an Ethernet cable for communication. Please see Section 4.1

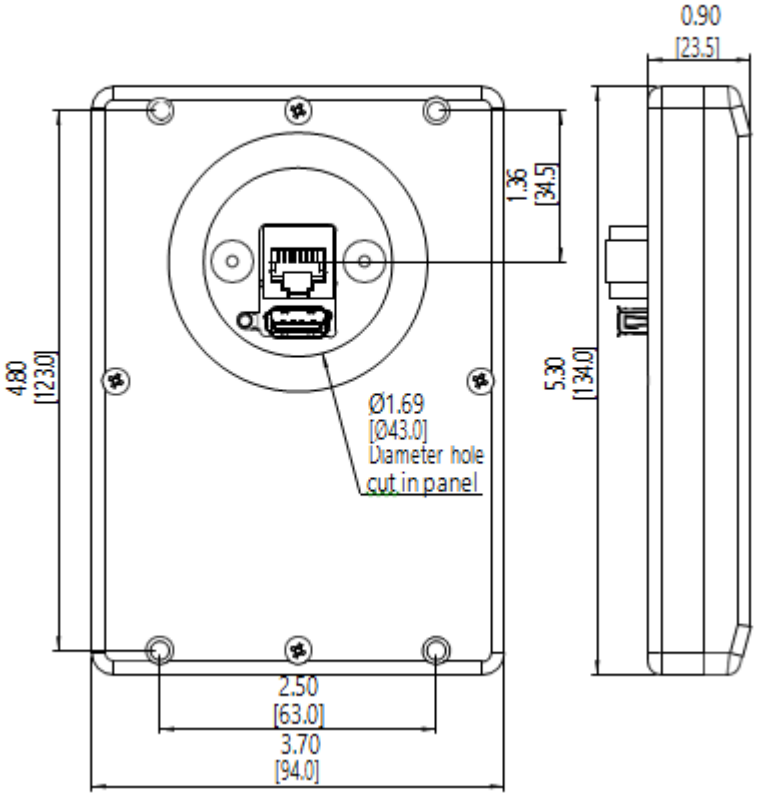

Network Connection

For a configuration where there is only one VMX-synergy™ unit (one-to-one) the remote and main unit can be directly cabled. See Diagram overleaf:

A RJ45 to RJ12 adaptor cable is available from Motortronics UK (part number CBL-014). The use of this adaptor is recommended to ease network installation and reduce the possibility of incorrect wiring.

A5. Remote Keypad Setup (continued)

Network Connection

Keypad to one VMX-synergy™ unit.

For a configuration where there is only one VMX-synergy™ unit (one-to-one) the remote and main unit can be directly cabled. See Diagram below:

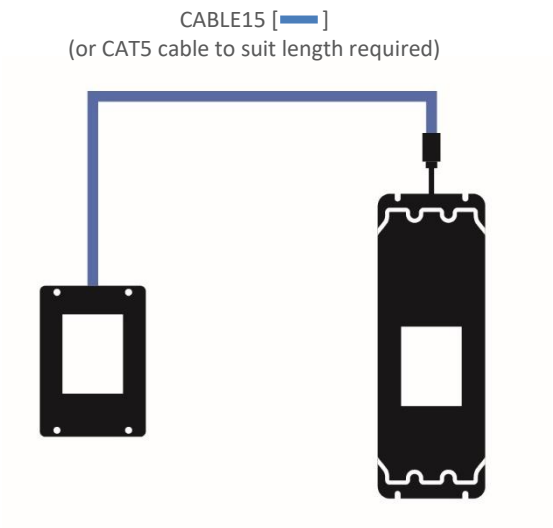

For multiple base units connected to the keypad, the use of SGY-011 is highly recommended. See diagram below.

Keypad to multiple VMX-synergy™ unit

For multiple base units connected to the keypad, the use of VMX-SGY-011 is highly recommended. See diagram below.

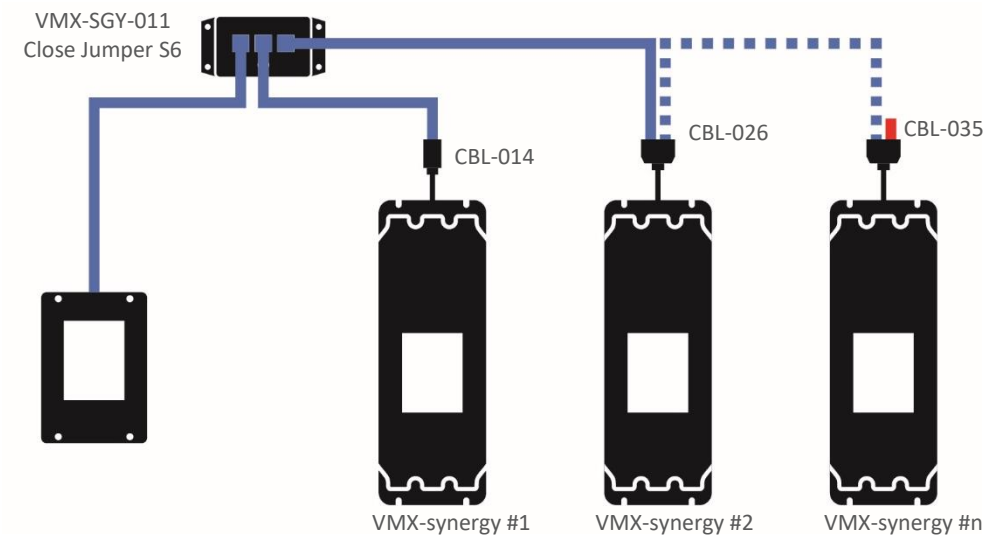

A5. Remote Keypad Setup (continued)

Remote Keypad Operation

Ensure starter's Modbus Network Settings are: Even parity and 19200 baud rate. If connecting to multiple starters, set the Address to a unique number for each VMX-synergy™ starter.

If remote touchscreen start/stop control is desired, set the Control Method to Modbus Control. If the remote touchscreen will only be used for monitoring or configuration (digital input or local touchscreen start/stop control will be used), select the appropriate setting (Local Touchscreen, User Programmable, 2-wire control, or 3-wire control).

Connect remote touchscreen using the CBL-014 adapter (VMX-synergy™ end) and a standard Ethernet patch cable. If connecting to multiple starters, a Modbus splitter (VMX-SGY-011) will be required for each starter.

On the remote touchscreen go to Modbus Network Settings as shown in Fig 1. and select Scan Bus. This will show all the VMX-synergy™ starters on the bus (Fig 2). Select which starter you wish to connect to.

Alternatively, you can select the Address number and then select Connect to connect to that particular starter.

The status screen Fig 3 on the remote touchscreen will display the current starter it is connected to by displaying the starter's node address and serial number (Example: address 01 and serial number A0167805).

Figure 1

Figure 2

Figure 3

The remote touchscreen's control for starting and stopping overrides the starter's onboard touchscreen when the starter's Control Method is set to Modbus Control. Menu navigation, configuration, and monitoring are still possible on the starter's touchscreen.

Press the starter icon box on the Status screen of the remote touchscreen to change to another starter if controlling multiple starters from one remote touchscreen.

When using the remote touchscreen for start/stop control the remote touchscreen has full control, configuration, and monitoring capabilities, while the local touchscreen on the starter only has configuration and monitoring capabilities. Digital outputs always function as programmed, regardless of Control Mode. Digital inputs are disabled during Modbus Control and Keypad Control Modes but are active during all other Control Modes.

The remote touchscreen can be used for monitoring and configuration during any other control method besides Modbus Control.

A5. Remote Keypad Setup (continued)

The remote keypad can only be used with the standard 'on-board' Modbus RTU connection. It cannot be used with Anybus modules.

The remote touchscreen is a Modbus RTU master device. A PLC, HMI, or other Modbus Master device cannot be used on the same network while the remote touchscreen is connected.

Notes

(en) **Electric current! Danger to life!**
Only skilled or instructed persons may carry out the operations.

(de) **Lebensgefahr durch Strom!**
Nur Elektrofachkräfte und elektrotechnisch unterwiesene Personen dürfen die im Folgenden beschriebenen Arbeiten ausführen.

(fr) **Tension électrique dangereuse!**
Seules les personnes qualifiées et averties doivent exécuter les travaux ci-après.

(es) **¡Corriente eléctrica! ¡Peligro de muerte!**
El trabajo a continuación descrito debe ser realizado por personas cualificadas y advertidas.

(it) **Tensione elettrica: Pericolo di morte!**
Solo persone abilitate e qualificate possono eseguire le operazioni di seguito riportate.

(zh) **触电危险！**
只允许专业人员和受过专业训练的人员进行下列工作。

(ru) **Электрический ток! Опасно для жизни!**
Только специалисты или проинструктированные лица могут выполнять следующие операции.

(nl) **Levensgevaar door elektrische stroom!**
Uitsluitelijk deskundigen in elektriciteit en elektrotechnisch geïnstrueerde personen is het toegestaan, de navolgend beschrevene werkzaamheden uit te voeren.

(da) **Livsfare på grund af elektrisk strøm!**
Kun uddannede el-installatører og personer der e instruerede i elektrotekniske arbejdsopgaver, må udføre de nedenfor anførte arbejder.

(el) **Προσοχή, κίνδυνος ηλεκτροπληξίας!**
Οι εργασίες που αναφέρονται στη συνέχεια θα πρέπει να εκτελούνται μόνο από ηλεκτρολόγους και ηλεκτροτεχνίτες.

(pt) **Perigo de vida devido a corrente eléctrica!**
Apenas electricistas e pessoas com formação electrotécnica podem executar os trabalhos que a seguir se descrevem.

(sv) **Livsfara genom elektrisk ström!**
Endast utbildade elektriker och personer som undervisats i elektroteknik får utföra de arbeten som beskrivs nedan.

(fi) **Hengenvaarallinen jännite!**
Vain pätevät sähköasentajat ja opastusta saaneet henkilöt saavat suorittaa seuraavat työt.

(cs) **Nebezpečí úrazu elektrickým proudem!**
Níže uvedené práce smějí provádět pouze osoby s elektrotechnickým vzděláním.

(et) **Eluohtlik! Elektrilöögioht!**
Järgnevalt kirjeldatud töid tohib teostada ainult elektriala spetsialist või elektrotehnilise instrueerimise läbinud personal.

(hu) **Életveszély az elektromos áram révén!**
Csak elektromos szakemberek és elektrotechnikában képzett személyek végezhetik el a következőkben leírt munkákat.

(lv) **Elektriskā strāva apdraud dzīvību!**
Tālāk aprakstītos darbus drīkst veikt tikai elektrospeciālisti un darbam ar elektrotehniskām iekārtām instruētās personas!

(lt) **Pavojus gyvybei dėl elektros srovės!**
Tik elektrikai ir elektrotechnikos specialistai gali atlikti žemiau aprašytus darbus.

(pl) **Porażenie prądem elektrycznym stanowi zagrożenie dla życia!**
Opisane poniżej prace mogą przeprowadzać tylko wykwalifikowani elektrycy oraz osoby odpowiednio poinstruowane w zakresie elektrotechniki.

(sl) **Življenjska nevarnost zaradi električnega toka!**
Spodaj opisana dela smejo izvajati samo elektrostrokovnjaki in elektrotehnično poučene osebe.

(sk) **Nebezpečenstvo ohrozenia života elektrickým prúdom!**
Práce, ktoré sú nižšie opísané, smú vykonávať iba elektroodborníci a osoby s elektrotechnickým vzdelaním.

(bg) **Опасност за живота от електрически ток!**
Операциите, описани в следващите раздели, могат да се извършват само от специалисти-електротехници и инструктиран електротехнически персонал.

(ro) **Atenţie! Pericol electric!**
Toate lucrările descrise trebuie efectuate numai de personal de specialitate calificat şi de persoane cu cunoştiinţe profunde în electrotehnică.

VMX-synergy™ user guide

© Motortronics UK Ltd
Bristow House
Gillard Way, Ivybridge
PL21 9GG
UK
www.motortronics-uk.co.uk