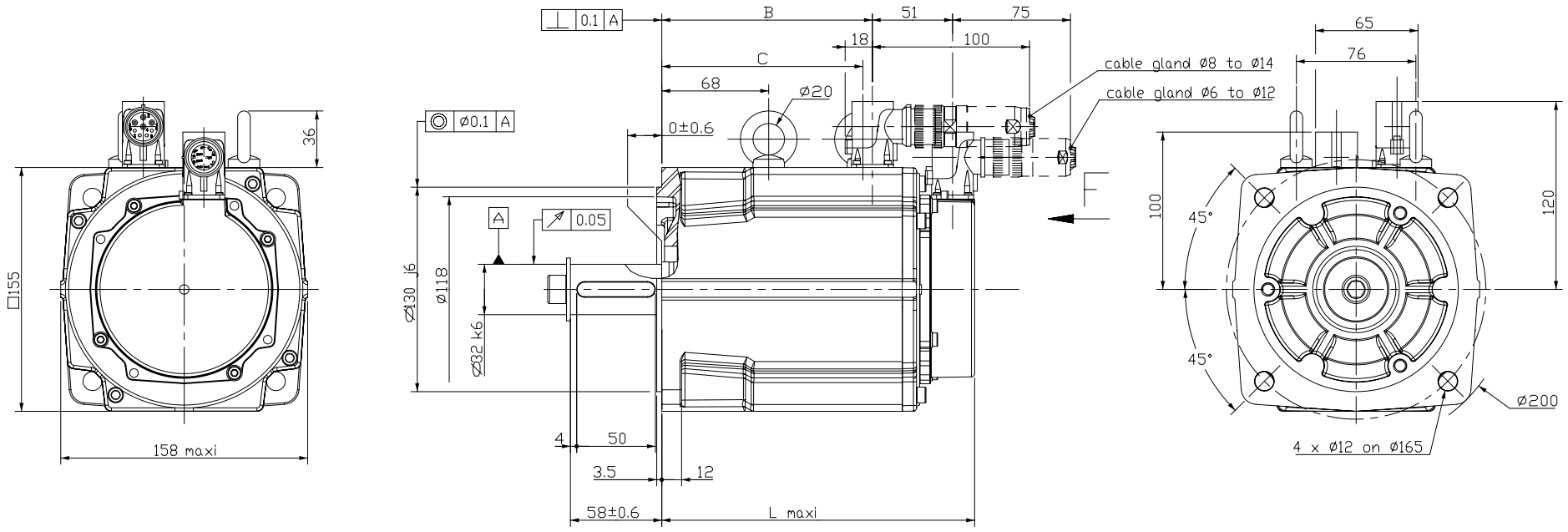

POWER CONNECTOR

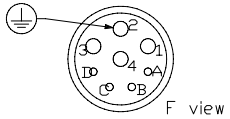

1 : Phase U
2 : Ground
3 : Phase W
4 : Phase V
A : No connection
B : No connection
C, D : Temperature sensor (option)

FEEDBACK CONNECTOR

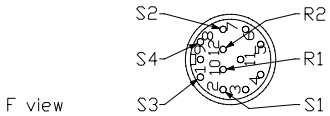

RESOLVER

Feed frequency..... : 8 kHz
Supply voltage..... : 7 V RMS
Input current..... : 70 mA Maxi
Max. electrical error..... : 20' Maxi
Transformation ratio..... : 0.5 typical
Phase shit..... : 20° Maxi
Polarity..... : 1 pair of poles

RELUCTANCE SENSOR

Feed frequency..... : 8 kHz
Input voltage..... : 7 V RMS
Input current..... : 71 mA Maxi
Max. electrical error..... : 8' Maxi
Transformation ratio..... : 0.33 typical
Phase shift..... : 15° Maxi
Polarity..... : 5 pairs of poles

ORIENTATION OF CONNECTORS

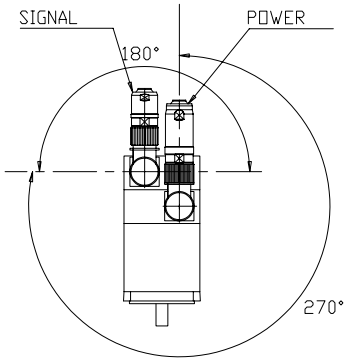

SHAFT END

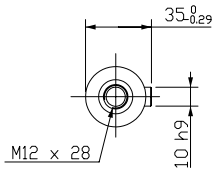

DIMENSIONS

	NX820	NX840	NX860
L maxi	200	260	320
B	134	194	254
C	128	188	248

Drawing valid for : R7001

Weight :

This document is the property of PARVEX.Transmission as well as reproduction or copy is not permitted without written authorisation.

Drawn	21/03/2003	GM	Visa	
Modifications	a	AM 21359 du 02/04/2003 NV		

Scale 3/8

PARVEX
8 Avenue du lac. BP249
21007-DIJON cedex-FRANCE
www.parvex.com

NX800

OUTLINE DRAWING

Format	F	E	S	G	I
A3	×	×			

344469E7001 a