890 Quickstart Manual

890SD (Standalone) Drive Frames G, H & J

HA471391U000 Issue 3 (ISO A4)
HA471391U001 Issue 3 (American Quarto)

© Copyright 2009 Parker Hannifin Ltd.

All rights strictly reserved. No part of this document may be stored in a retrieval system, or transmitted in any form or by any means to persons not employed by a Parker Hannifin Ltd., Automation Group, SSD Drives Europe without written permission from Parker Hannifin Ltd., Automation Group, SSD Drives Europe. Although every effort has been taken to ensure the accuracy of this document it may be necessary, without notice, to make amendments or correct omissions. Parker Hannifin ltd., Automation Group, SSD Drives Europe cannot accept responsibility for damage, injury, or expenses resulting therefrom.

WARRANTY

Parker SSD Drives warrants the goods against defects in design, materials and workmanship for the period of 24 months from the date of manufacture, or 12 months from the date of delivery (whichever is the longer period) on the terms detailed in Parker SSD Drives Standard Conditions of Sale IA500504.

Parker SSD Drives reserves the right to change the content and product specification without notice.

Contents

Page

Safety **3**
- Hazards to Personnel 3
- Application Risk 3
  - Risk Assessment 4
  - Accessibility 4
  - Protective Insulation 4
  - RCDs 4

Introduction **5**
- About this QuickStart 5

Overview **6**

Installation **7**
- Mounting Dimensions 8
- Air Flow 9
- Environmental Conditions 10
- AC Line Choke 10
- Main Cooling Fan and Supply Requirements 10

890SD Power Connections **11**

890SD Control Connections **12**

890SD Feedback Connections **13**

Drive Start-up **14**
- Before Applying Power : 14

Drive Set-up **15**
- Motor Data 15
- Quick Setup Parameters 15
- Autotune 16
- Running in Local 17
- Running in Remote 17

Appendix A: Using the 6901 Keypad **18**
- The Menu Structure 19

Appendix B: Analog and Digital I/O **20**
- 890SD Control Terminals 21

Appendix C: Electrical Ratings **22**
  - Notes for Electrical Ratings Tables 22
  - Electrical Ratings: 890SD Frame G, 400V 23
  - Electrical Ratings: 890SD Frame H, 400V 24
  - Electrical Ratings: 890SD Frame J, 400V 25

Safety

IMPORTANT *Please read this information BEFORE installing the equipment.*

This manual is for anyone installing and operating this unit.

You must be technically competent to install and operate this unit.

Before working on the unit, isolate the mains supply from terminals L1, L2 and L3 and wait 3 minutes.

Disconnect the unit from circuits when doing high voltage resistance checks.

The unit must be **permanently earthed** due to the high earth leakage current.

The drive motor must be connected to an appropriate safety earth.

Electrostatic discharge sensitive parts : observe static control precautions.

Copy existing 890 parameters to any replacement 890 unit

Hazards to Personnel

This equipment can endanger life through rotating machinery and high voltages. Failure to observe the following will constitute an ELECTRICAL SHOCK HAZARD.

Metal parts may reach a temperature of 70 degrees Centrigrade in operation.

Before working on the equipment, ensure isolation of the mains supply from terminals L1, L2 and L3. The equipment contains high value capacitors which discharge slowly after removal of the mains supply. Wait for at least 5 minutes for the dc link terminals (DC+ and DC-) to discharge to safe voltage levels (<50V). Measure the DC+ and DC- terminal voltage with a meter to confirm that the voltage is less than 50V.

Do not apply external voltage sources (mains suppy or otherwise) to any of the braking terminals (DC+, DBR).

Application Risk

The specifications, processes and circuitry described herein are for guidance only and may need to be adapted to the user's specific application.

Parker SSD Drives does not guarantee the suitability of the equipment described in the Manual for individual applications.

Risk Assessment

Under fault conditions, power loss or other operating conditions not intended, the equipment may not operate as specified. In particular:

- The motor speed may not be controlled
- The direction of rotation of the motor may not be controlled
- The motor may be energised

Accessibility

All live power terminals are IP20 rated only, since the equipment is intended to be installed within a normally-closed cubicle or enclosure, which itself requires a tool to open.

Protective Insulation

- All control and signal terminals are SELV, i.e. protected by double insulation. Ensure all wiring is rated for the highest system voltage.

NOTE ***Thermal sensors contained within the motor must be single/basic insulated.***

- All exposed metalwork in the Drive is protected by basic insulation and bonding to a safety earth.

RCDs

Not recommended for use with this product. Where their use is mandatory, use only Type B RCDs (EN61009).

Caution

This is a product of the restricted sales distribution class according to IEC 61800-3. It is designated as “professional equipment” as defined in EN61000-3-2. Permission of the supply authority shall be obtained before connection to the low voltage supply.

Introduction

The 890SD Standalone Drive is designed for speed control of standard ac 3-phase motors.

- Control it remotely using configurable analogue and digital inputs and outputs.
- Control it locally using the 6901 Keypad.
- Use the Design System Explorer Configuration Tool (DSE 890) to give access to parameters, diagnostic messages, trip settings and application programming.
- Fit Options to the unit to give serial communications and closed loop speed control.

IMPORTANT: *Motors used must be suitable for Inverter duty.*

About this QuickStart

This QuickStart will:

- Familiarise you with the terminals and operation of the unit.
- Provide ***basic** installation details and a quick set-up procedure.
- Show you how to Autotune the drive and start the motor.

  ***** *Because the 890 is a system product and we have no knowledge of your application, we detail the quickest way to power-up the drive using a simple earthing scheme with minimal control wiring. Refer to the full Engineering Reference Manual for items not covered in this QuickStart.*

Provided with every 890 unit is a :

- Quickstart
- Compact disk containing the Engineering Reference Manual and DSE Configuration Tool
- 6901 Keypad
- Customer-ordered Options

This QuickStart assumes that:

- You are a qualified technician with experience of installing this type of equipment.
- You are familiar with the relevant standards and Local Electric Codes (which take precedence).
- You have read and understood the Safety information provided at the front of this QuickStart.
- You realise that this guide contains only basic information and that you may need to refer to the Engineering Reference Guide to complete your installation.

Overview

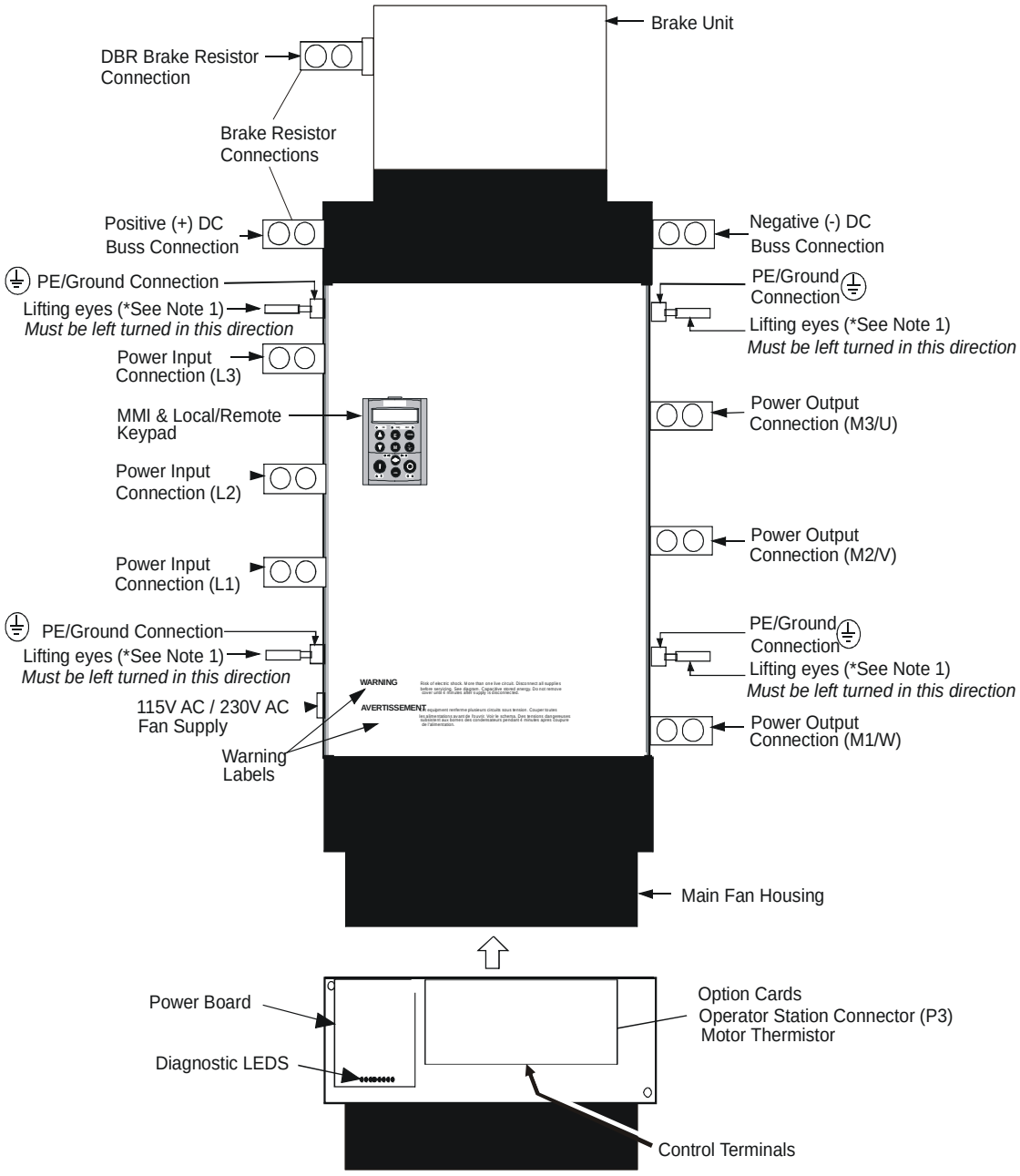

BOTTOM WITH COVER REMOVED

**** Note 1:***

PE / Grounding Connections

Lifting eyes must be replaced with supply and motor earth (ground) connections using M10 bolts and washers supplied. Under no circumstances should lifting eyes be used to make the PE / grounding connection.

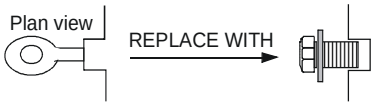

Installation

A simplified installation is shown below. This installation is **not** EMC compliant. For European installations and countries with EMC legislation refer to the 890 Engineering Reference Manual, Appendix C.

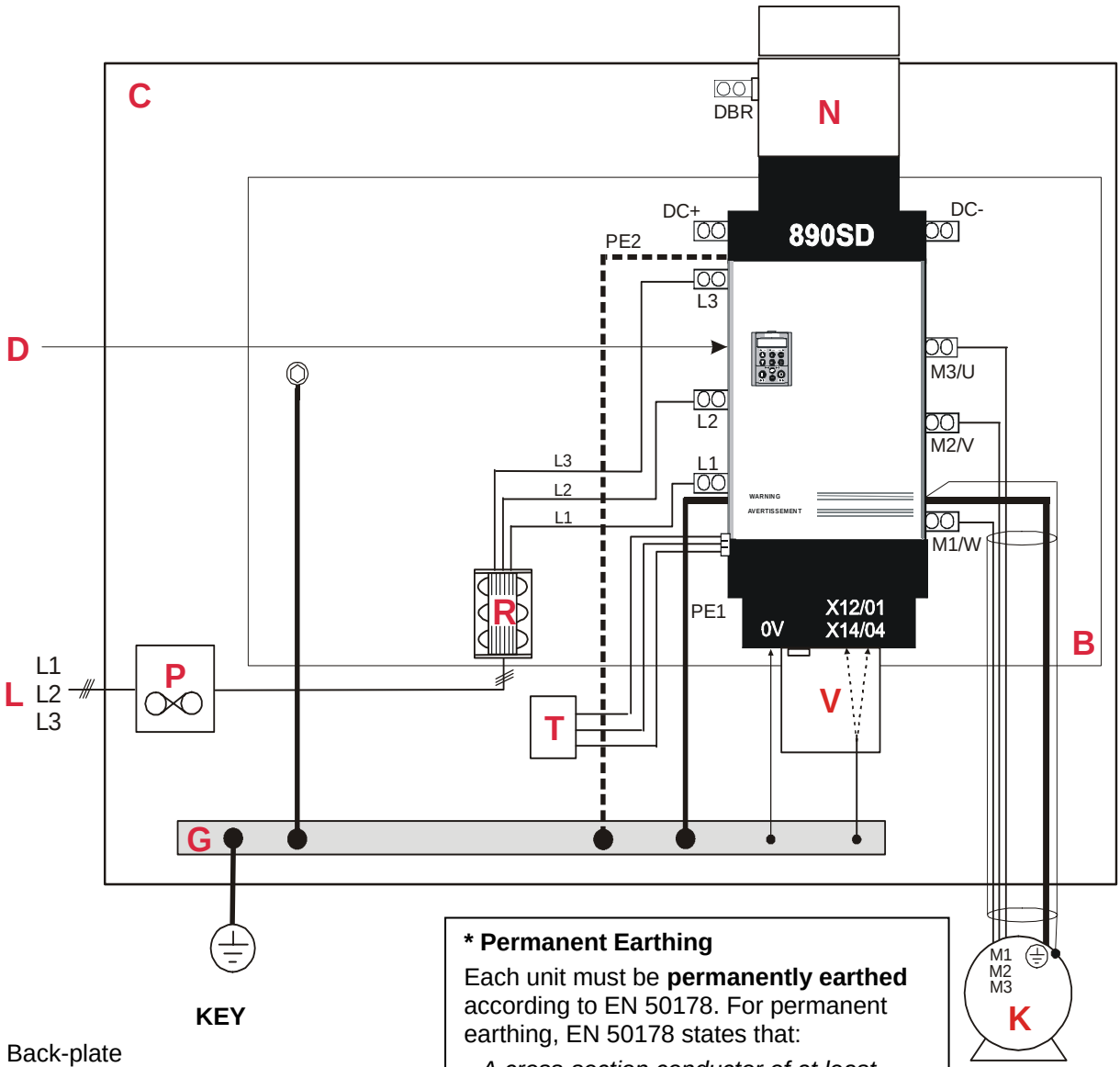

KEY

- **B** Back-plate
- **C** Cubicle
- **D** Control Wiring terminals
- **G** Supply Protective Earth/Ground
- **K** Motor (M1, M2, M3)
- **L** 3∅ Power Supply Cable (L1, L2, L3)
- **N** Vent Kit with (optional) Drive Brake Unit
- **P** Fuse or Circuit Breaker
- **R** AC Line Choke
- **T** Auxiliary Supply
- **V** External Fan (Frame J)

*** Permanent Earthing**

Each unit must be **permanently earthed** according to EN 50178. For permanent earthing, EN 50178 states that:

A cross-section conductor of at least 10mm² is required. This can be achieved either by using a single conductor (PE) or by laying a second conductor though separate terminals (PE2 where provided) and electrically in parallel.

Conductors must be sized in accordance with Local Wiring Regulations which always take precedence.

As a guide, refer to the Input Current for the drive given in the Electrical Ratings tables.

Mounting Dimensions

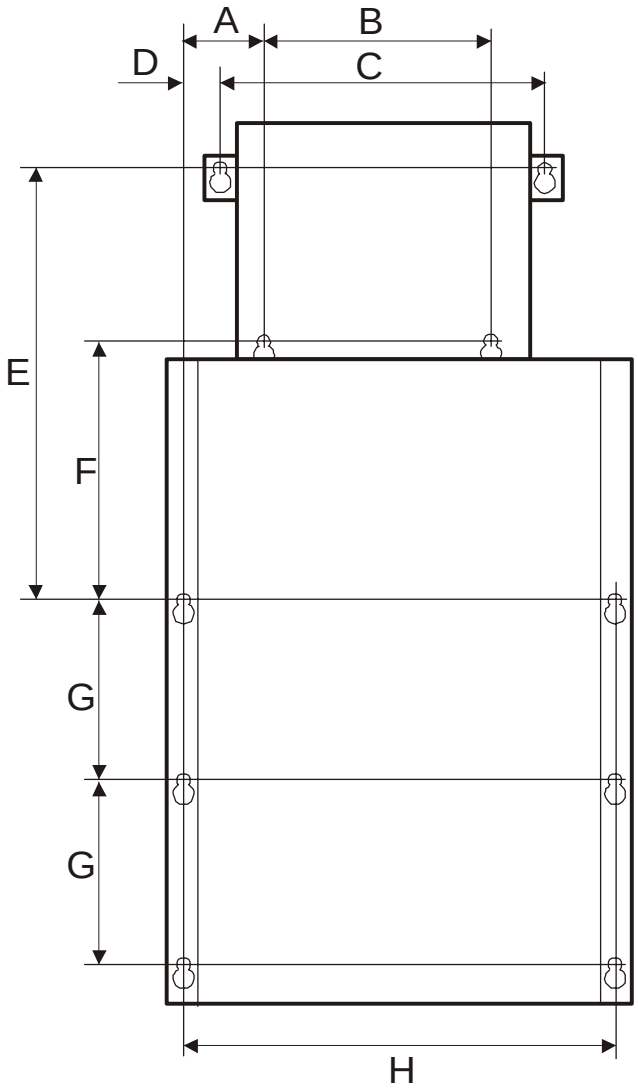

The units must be installed in a cubicle. The drive must be securely mounted using all 10 off M8 mounting hole positions. Refer to Chapter 4: Installation Drawings in the Engineering Reference manual for more information.

Models	Maximum Weight kg/lbs	A	B	C	D	E	F	G	H
Frame G	32.5/72	102 (4.0)	125 (4.9)	251 (9.9)	57 (2.2)	575 (22.6)	340 (13.4)	300 (11.8)	420 (16.5)
Frame H	41/90.4	102 (4.0)	240 (9.4)	378 (14.9)	51 (2.0)	575 (22.6)	340 (13.4)	300 (11.8)	535 (21.1)
Frame J	41/90.4	102 (4.0)	340 (13.4)	470 (18.5)	57 (2.2)	575 (22.6)	340 (13.4)	300 (11.8)	640 (25.2)
All dimensions are in millimetres (inches)									

Air Flow

We strongly recommend that brake/exhaust duct is fitted to the drive whether a brake is fitted or not. It is important that the top vent is properly fitted to assure that the exhaust air is not recirculated.

We also recommend that these drives are separated from other equipment in a large multifunction cabinet so that the airflow is better controlled. i.e. air heated by other items should not affect the inlet temperature to the drive's main fan.

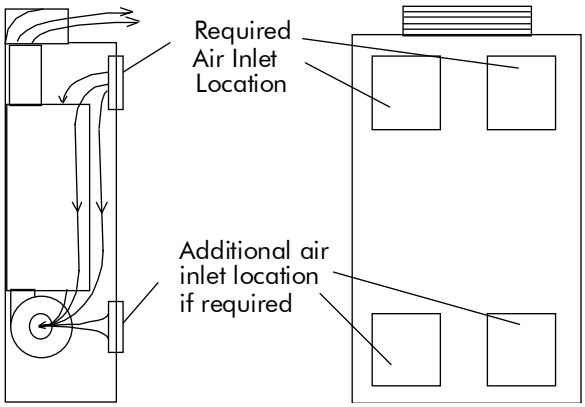

The volumetric airflow rate for each drive is:
G = 583m^3/hr (343CFM) H = 1505m^3/hr (884CFM) J = 1753m^3/hr (1032CFM).

WARNING!

This unit must be operated with either a brake unit or blanking plate fitted to the supplied outlet duct. The top vent is then mounted on to the outlet duct. It is very important that the gasket for the vent is correctly fitted to the brake/exhaust outlet duct. Otherwise, hot exhaust air will flow back into the cabinet and overheat the drive. The brake/exhaust outlet duct should protrude from the top of the cabinet by 5-10mm to ensure engagement with the gasket. Refer to Chapter 4: Installation Drawings in the Engineering Reference manual for more information

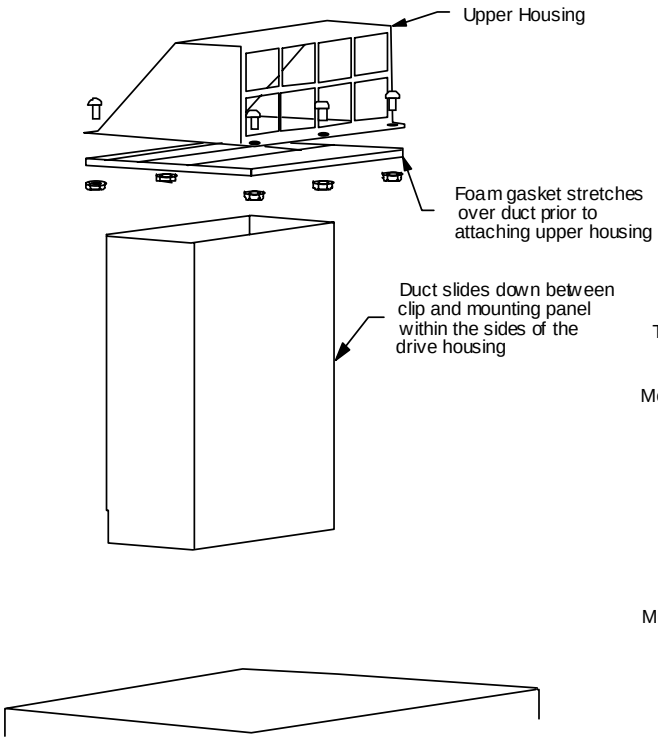

External Vent Kit
Frame G

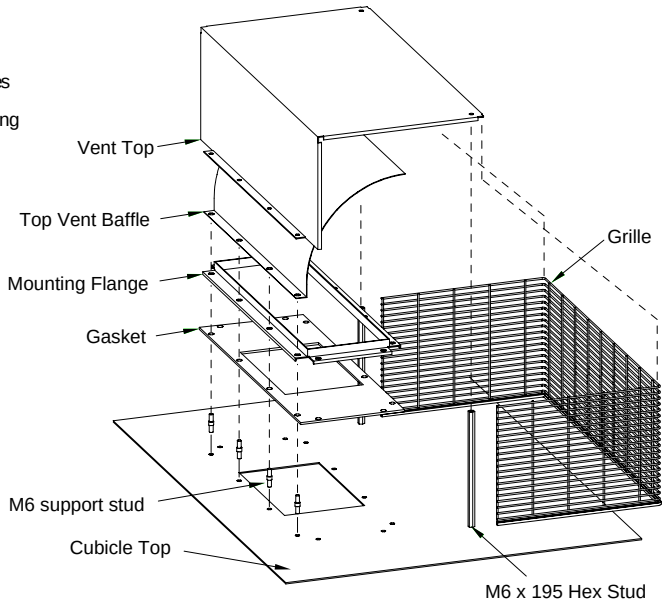

Top Vent and Gasket
Frames H and J

Environmental Conditions

Operating ambient temperature	0°C to 40°C (32°F to 104°F)
Enclosure rating	IP20 – UL(cUL) Open type
Atmosphere	Dust free, non flammable, non-corrosive, <85% humidity, non-condensing

AC Line Choke

IMPORTANT *The drive must be used with an AC Line Choke, however, where a drive is individually supplied from a dedicated transformer with the required impedance, the AC Line Choke is not required.*

We can supply the line chokes listed in the Engineering Reference Manual, Appendix E: "Technical Specifications" - Line Chokes.

If you wish to source your own line choke refer to the individual Electrical Rating tables in Appendix E for the relevant rms line currents. For constant torque applications refer to the AC Line Choke table for the peak instantaneous line current under overload conditions.

Caution

Failure to provide the correct line impedance will severely reduce the drives lifetime and could result in catastrophic failure of the drive.

Main Cooling Fan and Supply Requirements

The Frame G and H drives have an integral main cooling fan.

However, the Frame J drive has a separate main cooling fan which must be fitted to the bottom panel of the enclosure with the 4 off M6 nuts provided as shown in drawing HG465731U001 at the end of Chapter 4 in the Engineering Reference Manual. Also refer to drawing HG463151D002 for fan wiring details (Frame J only) in Chapter 10: “Routine Maintenance and Repair” – Fan Replacement.

The drives require an external single phase supply and fuse protection (motor start type) for the main cooling fan.

Drive	Part Number	Airflow (cfm / ^{3}/hr)	Supply Volts	Watts	Fuse
Frame G <=132kW (200 Hp)	DL389775 DL464085	350/595 350/595	115 230	205 195	3A 2A
Frame G >132kW (200 Hp)	DL465651U115 DL465651U230	475/807 475/807	115 230	315 330	4A 2A
Frame G >132kW (200 Hp)	DL471062U115 DL471062U1230	475/807 475/807	115 230	405 355	5A 3A
Frame H	DL389776U001 DL464086U001	883/1500 883/1500	115 230	560 520	8A 4A
Frame J	DL389776U001 DL464086U001	1032/1753 1032/1753	115 230	600 560	10A 5A

890SD Power Connections

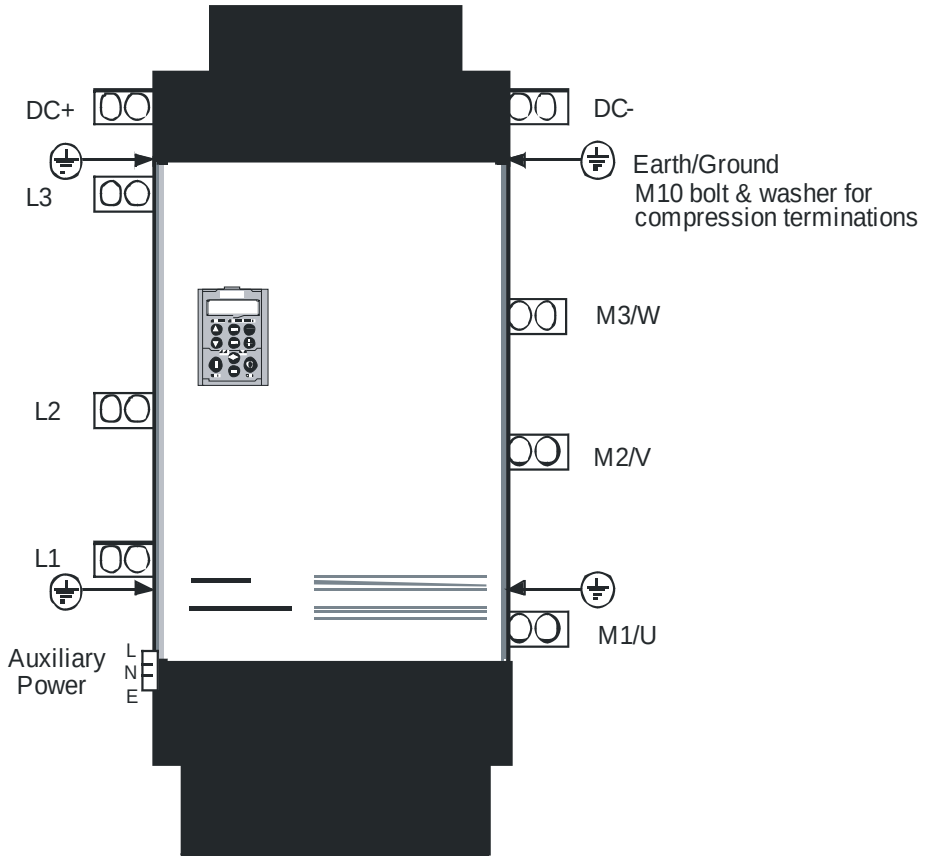

The unit must be **permanently earthed**. Protect the incoming mains supply using a suitable fuse or circuit breaker (circuit breaker types RCD, ELCB, GFCI are not recommended). Refer to Chapter 5: Circuit Breakers in the Engineering Reference Manual.

IMPORTANT: *The drive is only suitable for earth referenced supplies (TN) when fitted with an external ac supply EMC filter.*

For installations to EN 60204 in Europe:

Refer to Appendix C: “Certification for the Drive” - EMC Installation Options in the Engineering Reference Manual.

Permanent Earthing

Each unit must be **permanently earthed** according to EN 50178. For permanent earthing, EN 50178 states that:

A cross-section conductor of at least 10mm² is required. This can be achieved either by using a single conductor (PE) or by laying a second conductor though separate terminals (PE2 where provided) and electrically in parallel.

Conductors must be sized in accordance with Local Wiring Regulations which always take precedence.

As a guide, refer to the Input Current for the drive given in the Electrical Ratings tables.

890SD Control Connections

A Speed Reference

- **Connect a 10kΩ potentiometer at terminal block X12 (Analog I/P 3)**

  High (CW): terminal X12/08
  Wiper: terminal X12/04
  Low (CCW): terminal X12/01

- **Connect the shield to earth/ground at the bottom ground bracket**

OR

- **External 2-wire speed reference between**

  terminals X12/01(-) and X12/04(+)

- **Connect the shield to earth ground at the bottom ground bracket**

B Sequencing

- **Connect volt-free contacts as required**
- **RUN (maintained contact)**

  terminal X14/03 and terminal X15/02

C Thermistor

- **Connect motor thermal switch or thermistor to terminals X16/08 & X16/09. Drive will trip when the thermal switch opens, or when the thermistor resistance exceeds 4kΩ maximum (PTC Type A : IEC 34-11 Part 2)**
- **If the motor does not have a protective device (thermistor), jumper these terminals. The drive needs the thermistor inputs connected for it to run.**

Analog

- **SPEED FEEDBACK**

  10V = ±100% speed at terminal X12/0 6

- **TORQUE FEEDBACK**

  10V = ±200% torque at terminal X12/07

- **ANALOG COMMON**

  0V at terminal X12/0 1

Digital

- **DRIVE HEALTH**

  Relay dry contact (24V rated) at terminal X14/01 and terminal X14/02

- **RUNNING**

  24V sourcing output at terminal X15/08

- **ZERO SPEED**

  24V sourcing output at terminal X15/09

- **DIGITAL COMMON**

  0V at terminal X14/04

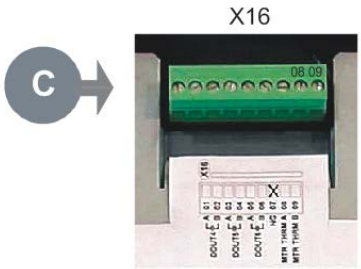

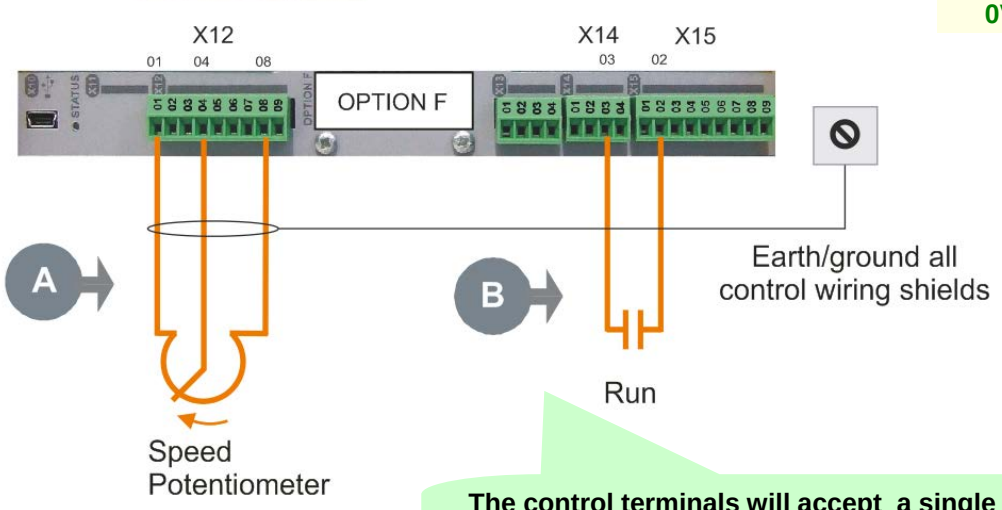

The control terminals will accept a single wire of size 1.5mm²/16AWG. For two wires per terminal, use smaller gauge wire such as 0.5mm²/22AWG.

This is a basic connection diagram.
For more detailed information on control connections, refer to Appendix B.

890SD Feedback Connections

This section is only for closed loop vector and induction servo applications. Skip this page if there is no encoder or resolver mounted on the motor.

Incremental Pulse Encoders

The default settings for the drive are for 2048 line, quadrature, incremental pulse encoders with differential outputs operating from a 10VDC supply.

- Z channel (Marker pulse) connections are not necessary for running the drive, but inputs are provided for positioning and servo applications. The supply voltage to the encoder is set in the Quick Setup menu. Range 10 VDC to 20 VDC

OPTION F Terminal Block

01	Shield
02	Supply –
03	Supply +
04	Channel Z/
05	Channel Z
06	Channel B/
07	Channel B
08	Channel A/
09	Channel A

Use the Keypad to set the following options:

Supply Voltage - PULSE ENC VOLTS

Number of lines per revolution - ENCODER LINES parameter

* Encoder direction - ENCODER INVERT

** Used to match the encoder direction to the motor direction. When TRUE, changes the sign of the measured speed and the direction of the position count. It is necessary to set up this parameter when in CLOSED-LOOP VEC mode, as the encoder direction must be correct for this mode to operate.*

Using other types of encoders requires the 890 DSE Configuration Tool and the setting of other parameters. Refer to the 890 Engineering Reference Manual for details of these parameters.

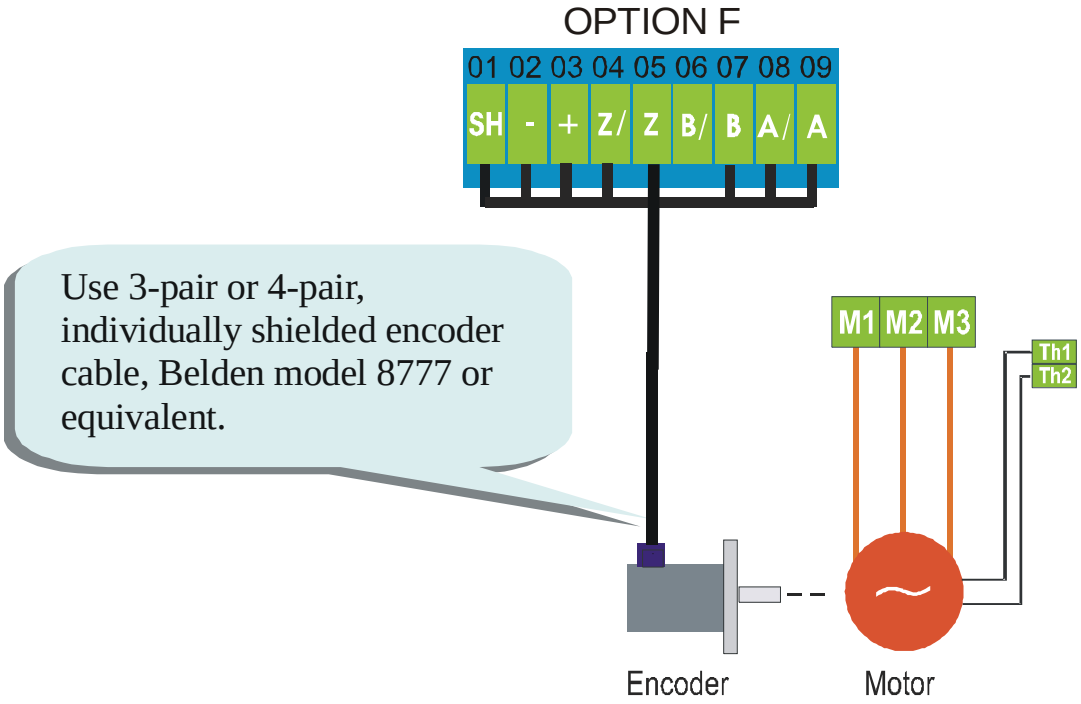

Drive Start-up

Before Applying Power :

- Read the Safety section at the front of the QuickStart.
- Ensure that all local electric codes are met.
- Check for damage to equipment.
- Check for loose ends, clippings, filings, drilling swarf etc. lodged in the drive and system.
- Check all external wiring circuits of the system - power, control, motor and earth connections.
- Ensure that unexpected rotation of the motor in either direction will not result in damage, bodily harm or injury. Disconnect the load from the motor shaft, if possible.
- Check the state of the Motor Thermistor and Brake Resistor connectors. Check external run contacts are open. Check external speed setpoints are all at zero.
- Ensure that nobody is working on another part of the system which will be affected by powering up.
- Ensure that other equipment will not be adversely affected by powering up.
- Check motor stator connections are correctly wired for Star or Delta as necessary for drive output voltage.

If all connections have been checked, it is time to POWER-UP the drive

Drive Set-up

Appendix A contains information about the 6901 keypad menus and parameter names.

Motor Data

Before attempting to set up the drive, you will need some motor information. This is found on the motor nameplate. The information you will need is listed below:

Base Volts
Base frequency
Base RPM
Full load amps
No load amps (mag current)
Connection (star or delta)

Quick Setup Parameters

The following is a list of the Quick Setup parameters you must check before starting the drive. Set only the ones marked with “x” in the table below, under the intended mode of operation.

		V/Hz	SV	Vector
Control Mode	Select the intended operating mode	x	x	x
Max Speed	Motor RPM at full process speed	x	x	x
V/F shape	Usually Linear. Choose fan curve only for fans	x		
Motor Current	Motor full load current from motor nameplate	x	x	x
Motor Base Freq	Motor nameplate frequency	x	x	x
Motor Voltage	Motor nameplate voltage	x	x	x
Nameplate RPM	Motor nameplate RPM	x	x	x
Motor Poles	*See Note*		x	x
Pulse Enc Volts	Set between 10-20V to match encoder			x
Encoder Lines	Pulses per Revolution of encoder			x
Encoder Invert	Changes polarity of encoder feedback			x
Autotune Enable	Drive will Autotune if started		x	x
Mag Current	Enter the No-Load Amps from the motor nameplate		x*	x*

** if performing a Stationary Autotune.*

NOTE **Some of the parameters are product code dependent, that is, they are different for each frame size and power rating. For example, the unit will be set for either 50Hz or 60Hz operation:**

Motor Poles for 60Hz 2 poles = 3600 rpm, 4 poles = 1800 rpm, 6 poles = 1200 rpm
Motor Poles for 50Hz 2 poles = 3000 rpm, 4 poles = 1500 rpm, 6 poles = 1000 rpm

Autotune

This section is only for operating in Sensorless or Closed-loop Vector modes.
If the drive is in V/Hz mode, Autotune is unnecessary and will not Enable.

- Ensure that MAX SPEED is greater than NAMEPLATE RPM for a successful autotune.
- In the QUICK SETUP menu, set AUTOTUNE ENABLE to TRUE.

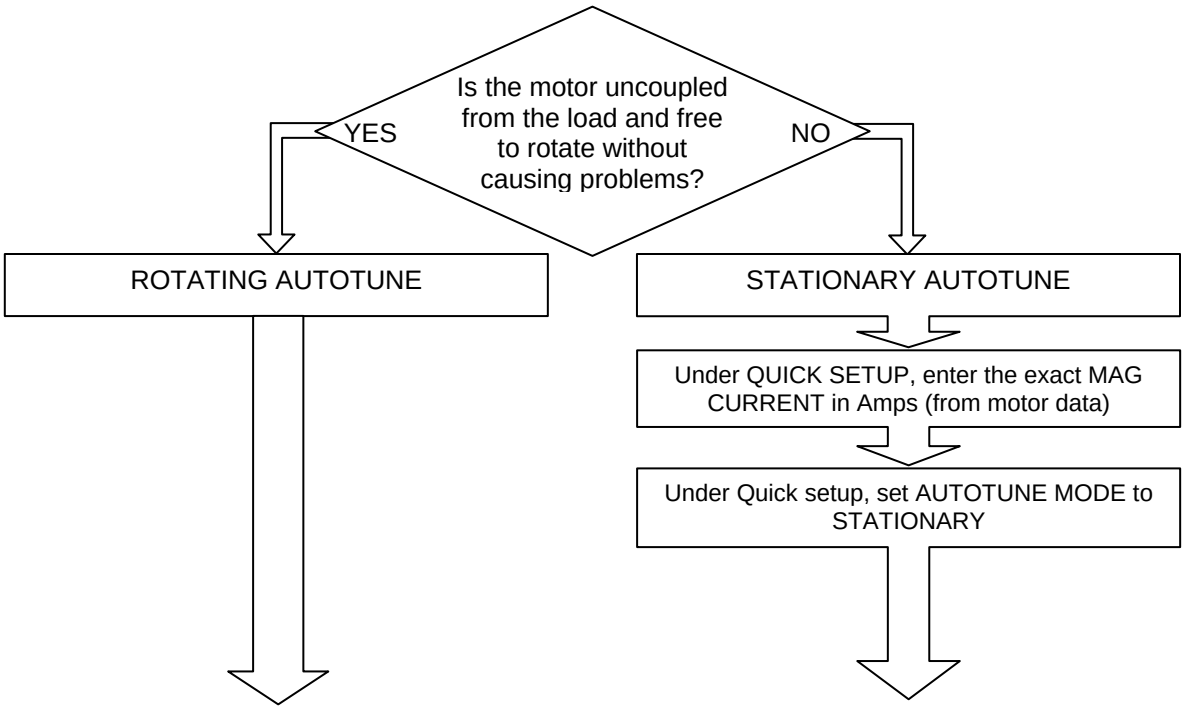

- On the 890SD keypad select LOCAL mode. Set SETPOINT (LOCAL) to 0.0%.
- Press the green RUN button. The drive will begin autotuning. The drive will stop without errors if autotune is successful.
- Go to SYSTEM::SAVE CONFIG::APPLICATION and UP arrow to save your settings.

Running in Local

- On the keypad select LOCAL mode. The display will show the Local Setpoint : 0.0%
- Use the UP arrow to set a Local Setpoint, say 20%.
- Press the green RUN button. The motor will accelerate to the desired speed and maintain it. Adjust RAMP ACCEL TIME in Quick Setup to the desired level.
- Press the red STOP button. The motor will decelerate to a stop. Adjust RAMP DECEL TIME in Quick Setup to desired level. If the drive trips on Overvoltage, extend the RAMP DECEL TIME or connect a braking resistor. Refer to the 890 Engineering Reference Manual.

Go to SYSTEM::SAVE CONFIG::APPLICATION and UP arrow to save your settings Values are stored during power-down.

Running in Remote

- On the keypad select REMOTE mode. The display will show the remote Setpoint : ?.?% (The value displayed depends on the external speed reference).
- Dial in a speed setpoint using the Speed potentiometer until the display reads 20%.
- Start the drive by closing the Start contact between terminal X14/03 and terminal X15/02. The motor will accelerate to the desired speed and maintain it. Adjust RAMP ACCEL TIME in Quick Setup to the desired level.
- Open the Start contact. The motor will decelerate to a stop. Adjust RAMP DECEL TIME in Quick Setup to desired level. If the drive trips on Overvoltage, extend the RAMP DECEL TIME or connect a braking resistor. Refer to the 890 Engineering Reference Manual..

Go to SYSTEM::SAVE CONFIG::APPLICATION and UP arrow to save your settings Values are stored during power-down.

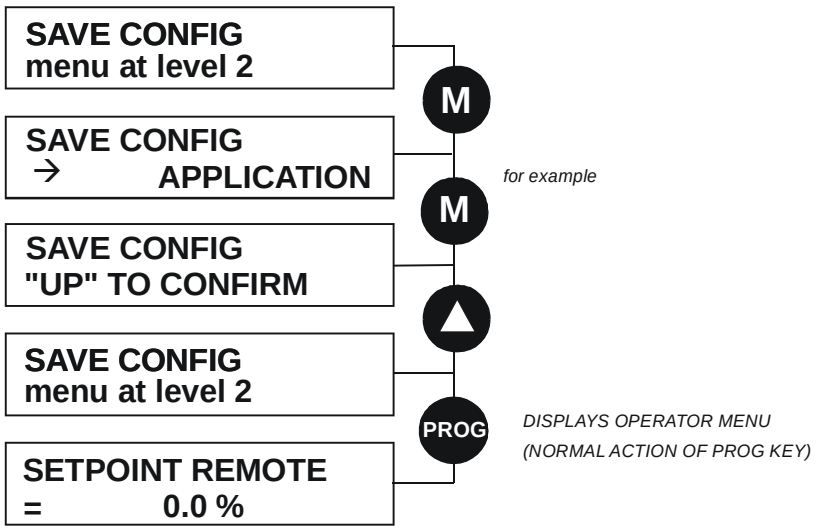

Appendix A: Using the 6901 Keypad

The 6901 keypad has a two-line backlit LCD display with units and symbols. It can be used to setup and configure the 890 in plain language. It can also be used to operate the drive in Local mode from its Start and Stop buttons, Jog and reverse.

SEQ and REF LEDs are On when in Local mode

To display the Software Version and Voltage Rating:

Press E repeatedly to display the Welcome Screen

Press M to return to the Menus

To Start in Local Mode:

Press I

To Stop in Local Mode:

Press O

Menus :	E exit a menu	M sub-menu or parameter	▲ scroll up	▼ scroll down
Parameters :	E exit parameter	M make writable	▲ previous parameter	▼ next parameter
Edit	E stop editing	M show PREF (hold)	▲ increment value	▼ decrement value

To change Operating Mode:
From power-up, the keypad displays the Software Version, and then times-out to show the Remote Setpoint.

Mode	Action
Remote to Local	Toggle between modes using the L/R key SEQ and REF LEDs are On when in Local
Local to Remote	Toggle between modes using the L/R key SEQ and REF LEDs are Off when in Remote

The Menu Structure

The main menus are shown below. Each menu contains parameters.

AC MOTOR DRIVE 15kW 400V 1.x	This is the power-up welcome screen. If a different screen appears, press E a few times to return to this screen.
M — **OPERATOR menu at level 1**	Press the M key to get to the OPERATOR menu
▼ — **DIAGNOSTICS menu at level 1**	DOWN arrow to get to the DIAGNOSTICS menu
▼ — **QUICK SETUP menu at level 1**	DOWN arrow to get to the QUICK SETUP menu
▼ — **SETUP menu at level 1**	DOWN arrow to get to the SETUP menu - contains all the parameters
▼ — **SYSTEM menu at level 1**	DOWN arrow to get to the SYSTEM menu

NOTE **Refer to the Engineering Reference Manual for a list of available parameters.**

Appendix B: Analog and Digital I/O

The terminal function names apply to the factory shipping configuration. These terminals may have different functions if the configuration has been modified using DSE.

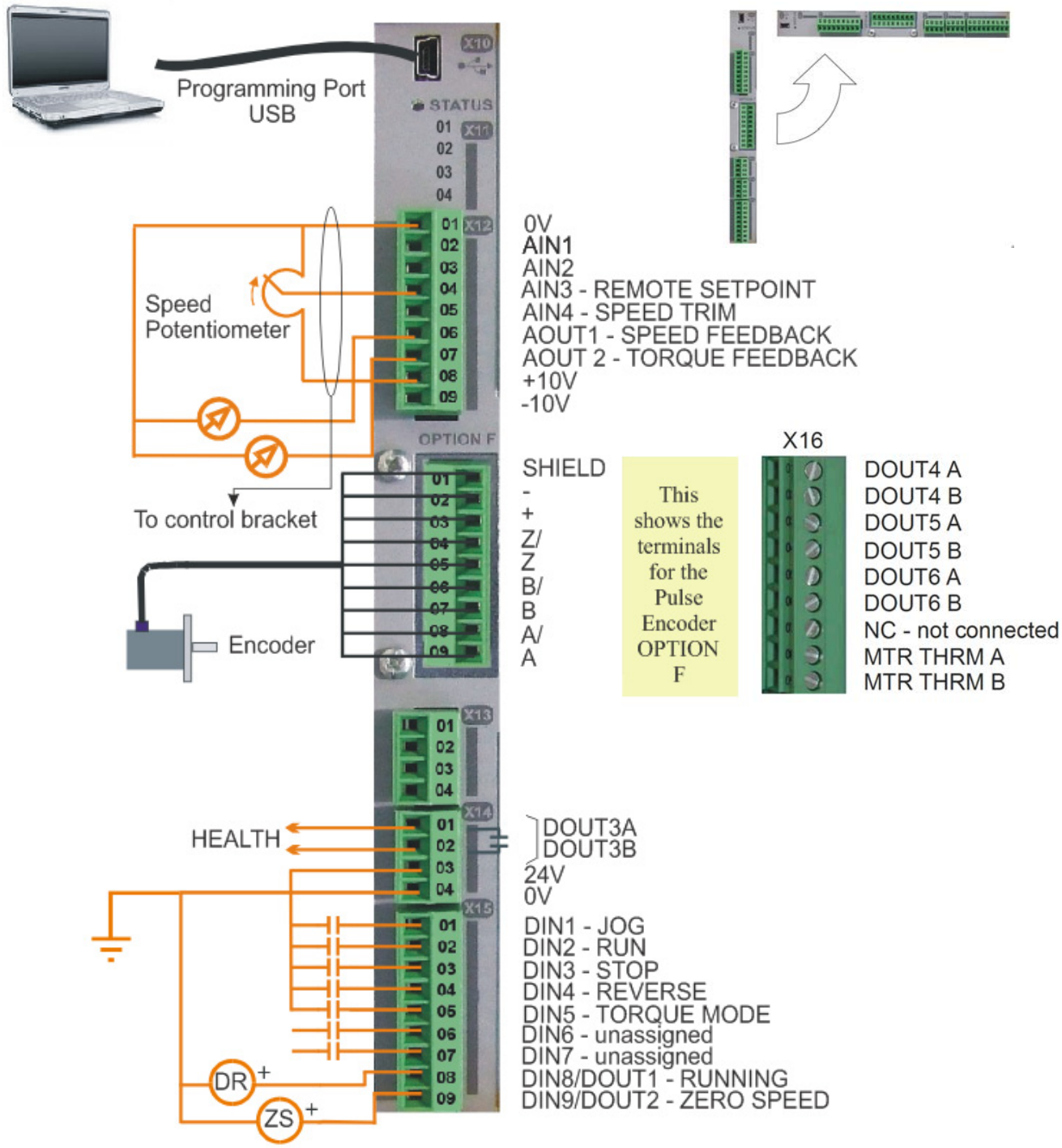

890SD Control Terminals

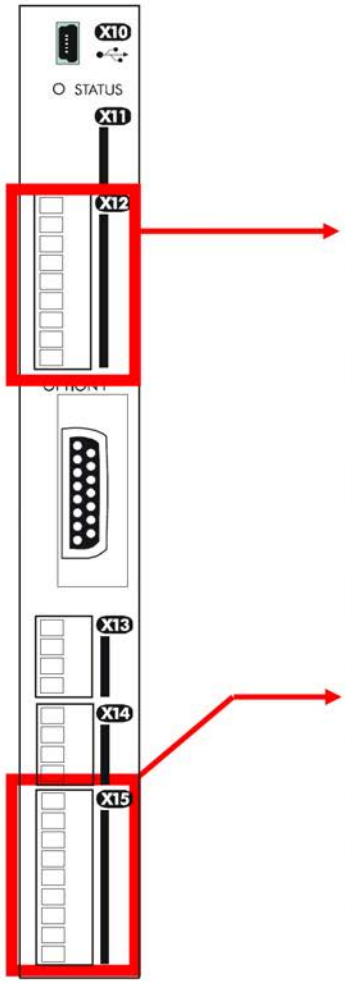

The terminal function names apply to the factory shipping configuration. These terminals may have different functions if the configuration has been modified using DSE.

- Analog I/O connector is X12
- Analog I/O resolution is 12 bit plus sign
- Digital I/O connector is X15
- Digital I/O is 24VDC, sourced, active high

Terminal	Name	Range	Description
ANALOG I/O			
X12/01	0V		0V reference for analog I/O
X12/02	AIN1	0-10V, ±10V	Analog Input 1 Configurable (default = diff I/P +)
X12/03	AIN2	0-10V, ±10V	Analog Input 2 Configurable (default = diff I/P -)
X12/04	AIN3	±10V, 0-10V, 0-20mA, 4-20mA	Analog Input 3 Configurable (default = remote setpoint I/P)
X12/05	AIN4	±10V, 0-10V, 0-20mA, 4-20mA	Analog Input 4 Configurable (default = speed trim I/P)
X12/06	AOUT1	±10V (10V=100%speed)	Analog Output 1 Configurable (default = speed feedback O/P)
X12/07	AOUT2	±10V (10V=200% torque)	Analog Output 2 Configurable (default = torque feedback O/P)
X12/08	+10V REF	+10V	10V reference for analog i/o. Load 10mA maximum
X12/09	–10V REF	-10V	10V reference for analog i/o. Load 10mA maximum
DIGITAL I/O			
X15/01	DIN1	0 or 24V	Configurable Digital Input 1 (default = Jog)
X15/02	DIN2	0 or 24V	Configurable Digital Input 2 (default = Run)
X15/03	DIN3	0 or 24V	Configurable Digital Input 3 (default = Stop)
X15/04	DIN4	0 or 24V	Configurable Digital Input 4 (default = Reverse)
X15/05	DIN5	0 or 24V	Configurable Digital Input 5 (default = Torque mode)
X15/06	DIN6	0 or 24V	Configurable Digital Input 6 (default = Unassigned)
X15/07	DIN7	0 or 24V	Configurable Digital Input 7 (default = Unassigned)
X15/08	DIN8/DOUT1	0 or 24V	Configurable Digital Input/output (default : digital input = Running)
X15/09	DIN9/DOUT2	0 or 24V	Configurable Digital Input/output (default : digital input = Zero Speed)

Appendix C: Electrical Ratings

Notes for Electrical Ratings Tables

Notes for Electrical Ratings Tables

Read these notes in conjunction with the following Electrical Rating tables.

1. **IMPORTANT : 3% line impedance MUST be provided for each unit,** and is assumed in the quoted input current values. Failure to do so will severely shorten DC link capacitor lifetime and could result in damage to the inverter. Refer to AC Line Choke table.
2. Input currents for kW ratings are at 400V 50Hz ac input, and for Hp ratings at 460V 60Hz ac input.
3. Short circuit protection Semiconductor Fuses should be installed in the 3-phase supply to the drive module to protect the input bridge. Circuit breakers or HRC fuses will not protect the input bridge.
4. Fundamental Input Power Factor : 0.95
5. Output Voltage (maximum) = Input Voltage
6. Output Frequency : 0 to 120Hz
7. Fan Inlet Temperature Range : 0 to 40°C
8. Earth Leakage Current : >>100mA. Product must be permanently earthed.
9. True value given, note that the MMI will display 3kHz

Electrical Ratings: 890SD Frame G, 400V

Electrical Ratings: 890SD Frame G, 400V

Power Supply = 380-460V ±10%, 50/60Hz ±5%

Motor power, output current and input current must not be exceeded under steady state operating conditions.
Suitable for earth referenced (TN) and non-earth referenced (IT) supplies.

Model Number (Europe)	Model Number (North America)	Motor Power	Output Current (A)	AC Input Current (A) *(notes 1 & 2)*	Heatsink Power Loss (W)	Total Power Loss (W)	Maximum Switching Frequency (kHz) *(note 9)*	Input Bridge I^2t (A^2s)
FRAME G :	Prospective short circuit current 100kA maximum.							
Constant Torque (Output Overload Motoring 150% for 60s)								
890SD/4/0216G/..		110kW	216	216	2097	2426	2.5	304000
	890SD/4/0216G/..	175hp	216	186			2.5	304000
890SD/4/0250G/..		132kW	250	246	2598	2912	2.5	304000
	890SD/4/0250G/..	200hp	250	236			2.5	304000
890SD/4/0316G/..		160kW	316	305	3169	3500	2.5	813000
	890SD/4/0316G/..	250hp	316	307			2.5	813000
890SD/4/0361G/..		180kW	361	336	3347	3723	2.5	813000
	890SD/4/0361G/..	300hp	361	358			2.5	813000
Quadratic Torque (Output Overload Motoring 110% for 60s)								
890SD/4/0216G/..		132kW	260	247	2590	2920	2.5	304000
	890SD/4/0216G/..	200hp	260	239			2.5	304000
890SD/4/0250G/..		150kW	302	297	3169	3482	2.5	304000
	890SD/4/0250G/..	250hp	302	288			2.5	304000
890SD/4/0316G/..		180kW	361	341	3635	3967	2.5	813000
	890SD/4/0316G/..	300hp	361	358			2.5	813000
890SD/4/0361G/..		220kW	420	402	4032	4409	2.5	813000
	890SD/4/0361G/..	350hp	420	411			2.5	813000

Electrical Ratings: 890SD Frame H, 400V

Electrical Ratings: 890SD Frame H, 400V

Power Supply = 380-460V ±10%, 50/60Hz ±5%

Motor power, output current and input current must not be exceeded under steady state operating conditions.
Suitable for earth referenced (TN) and non-earth referenced (IT) supplies.

Model Number (Europe)	Model Number (North America)	Motor Power	Output Current (A)	AC Input Current (A) *(notes 1 & 2)*	Heatsink Power Loss (W)	Total Power Loss (W)	Maximum Switching Frequency (kHz) *(note 9*	Input Bridge I^2t (A^2s)
FRAME H :	Prospective short circuit current 100kA maximum.							
Constant Torque (Output Overload Motoring 150% for 60s, 180% for 0.5s short term rating)								
890SD/4/0375H/..	890SD/4/0375H/..	200kW	375	367	3566	3954	2.5	813000
890SD/4/0420H/..	890SD/4/0420H/..	220kW 350hp	420 420	400 409	4030	4418	2.5 2.5	813000 813000
890SD/4/0480H/..	890SD/4/0480H/..	250kW 400hp	480 480	466 477	4559	4984	2.5 2.5	813000 813000
890SD/4/0520H/..	890SD/4/0520H/..	280kW 450hp	520 520	516 529	5031	5469	2.5 2.5	813000 813000
Quadratic Torque (Output Overload Motoring 110% for 60s)								
890SD/4/0375H/..	890SD/4/0375H/..	250kW	480	450	4704	5092	2.5	813000
890SD/4/0420H/..	890SD/4/0420H/..	250kW 400hp	480 480	450 461	4704	5092	2.5 2.5	813000 813000
890SD/4/0480H/..	890SD/4/0480H/..	300kW 450hp	545 545	545 529	5317	5743	2.5 2.5	813000 813000
890SD/4/0520H/..	890SD/4/0520H/..	315kW 500hp	590 590	571 581	5761	6200	2.5 2.5	813000 813000

Electrical Ratings: 890SD Frame J, 400V

Electrical Ratings: 890SD Frame J, 400V

Power Supply = 380-500V ±10%, 50/60Hz ±5%

Motor power, output current and input current must not be exceeded under steady state operating conditions.

Suitable for earth referenced (TN) and non-earth referenced (IT) supplies.

Model Number (Europe)	Model Number (North America)	Motor Power	Output Current (A)	AC Input Current (A) *(notes 1 & 2)*	Heatsink Power Loss (W)	Total Power Loss (W)	Maximum Switching Frequency (kHz) *(note 9*	Input Bridge I^2t (A^2s)
FRAME J :	Prospective short circuit current 100kA maximum.							
Constant Torque (Output Overload Motoring 150% for 60s, 180% for 0.5s short term rating)								
890SD/4/0590J/..		315kW	590	576	5788	6260	2.5	813000
	890SD/4/0590J/..	500hp	590	584			2.5	813000
Quadratic Torque (Output Overload Motoring 110% for 60s)								
890SD/4/0590J/..		355kW	650	642	6479	6951	2.5	813000
	890SD/4/0590J/..	550hp	650	636			2.5	813000