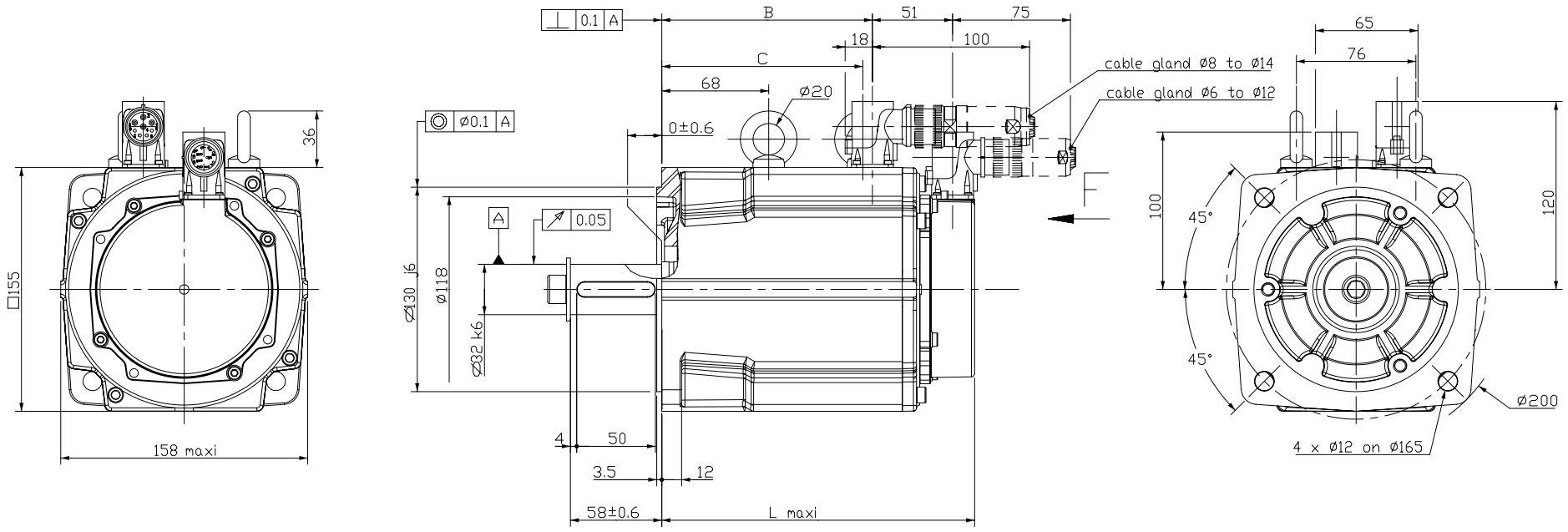


POWER CONNECTOR

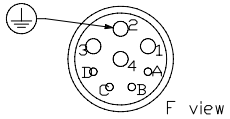


1 : Phase U
2 : Ground
3 : Phase W
4 : Phase V
A : No connection
B : No connection
C, D : Temperature sensor (option)

FEEDBACK CONNECTOR

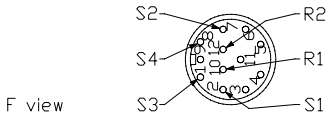


RESOLVER

Feed frequency..... : 8 kHz
Supply voltage..... : 7 V RMS
Input current..... : 70 mA Maxi
Max. electrical error..... : 20' Maxi
Transformation ratio..... : 0.5 typical
Phase shit..... : 20° Maxi
Polarity..... : 1 pair of poles

RELUCTANCE SENSOR

Feed frequency..... : 8 kHz
Input voltage..... : 7 V RMS
Input current..... : 71 mA Maxi
Max. electrical error..... : 8' Maxi
Transformation ratio..... : 0.33 typical
Phase shift..... : 15° Maxi
Polarity..... : 5 pairs of poles

ORIENTATION OF CONNECTORS

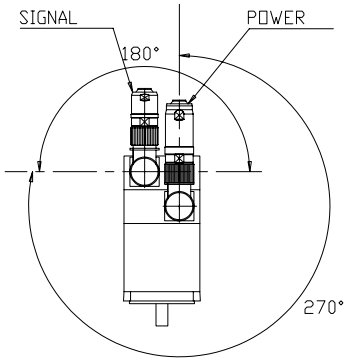


SHAFT END

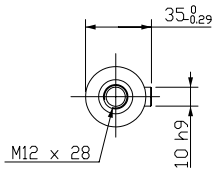


DIMENSIONS

| | NX820 | NX840 | NX860 |
|---|---|---|---|
| L maxi | 200 | 260 | 320 |
| B | 134 | 194 | 254 |
| C | 128 | 188 | 248 |

Drawing valid for : R7001

Weight :

This document is the property of PARVEX.Transmission as well as reproduction or copy is not permitted without written authorisation.

| | | | | |
|---|---|---|---|---|
| Drawn | 21/03/2003 | GM | Visa | |
| Modifications | a | AM 21359 du 02/04/2003 NV | | |

Scale 3/8

PARVEX
8 Avenue du lac. BP249
21007-DIJON cedex-FRANCE
www.parvex.com

NX800

OUTLINE DRAWING

| Format | F | E | S | G | I |
|---|---|---|---|---|---|
| A3 | × | × | | | |

344469E7001 a