“LWPC”
DIMENSIONES (mm)

“LWPC”
ABMESSUNGEN (mm)

“LWPC”
DIMENSIONS (mm)

“LWPC”
DIMENSIONS (mm)

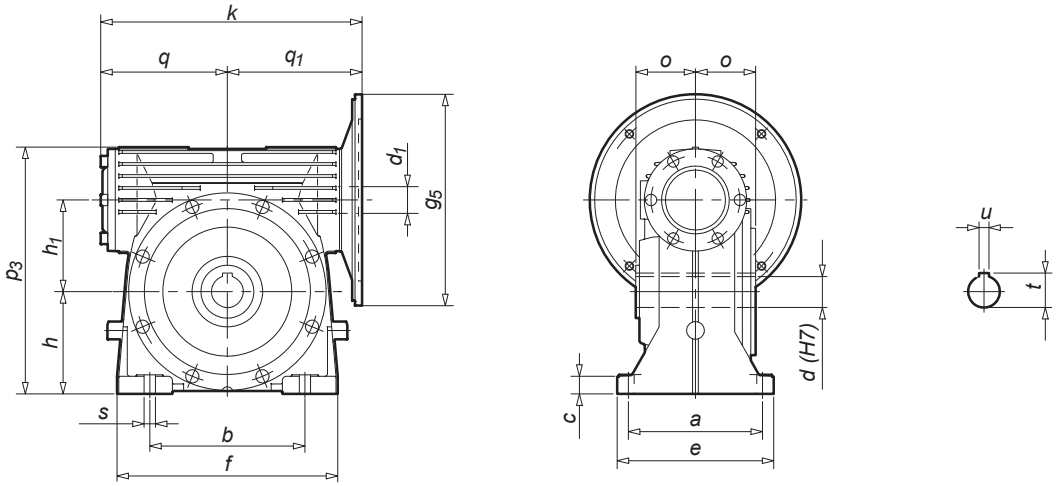

Tipo Typ Type Type	d_1	g_5	k	q_1	a	b	c	e	f	h	h_1	o	p_3	q	s	d	t	u
40	9	105	124.5	70	106	70	13	126	106	55	40	39	132.5	54.5	9	18 (19)	20.8 21.8	6
	9	120																
	9	140																
	9	160																
	11	105																
	11	120																
	11	140																
	11	160																
	14	105																
	14	120																
	14	140																
	14	160																
50	11	105	144.5	80	116	80	15	140	125	66	50	46	153.5	64.5	11	25 (24)	28.3 (27.3)	8
	11	120																
	11	140																
	11	160																
	11	200																
	14	105																
	14	120																
	14	140																
	14	160																
	14	200																
	19	105																
	19	120																
	19	140																
	19	160																
	19	200																
63	14	120	175.4	96	140	102	17	164	152	78	63	56	188	79.5	11	30 (25) (28)	33.3 (28.3) (31.3)	8
	14	160																
	14	200																
	19	120																
	19	160																
	19	200																
	24	120																
	24	160																
	24	200																