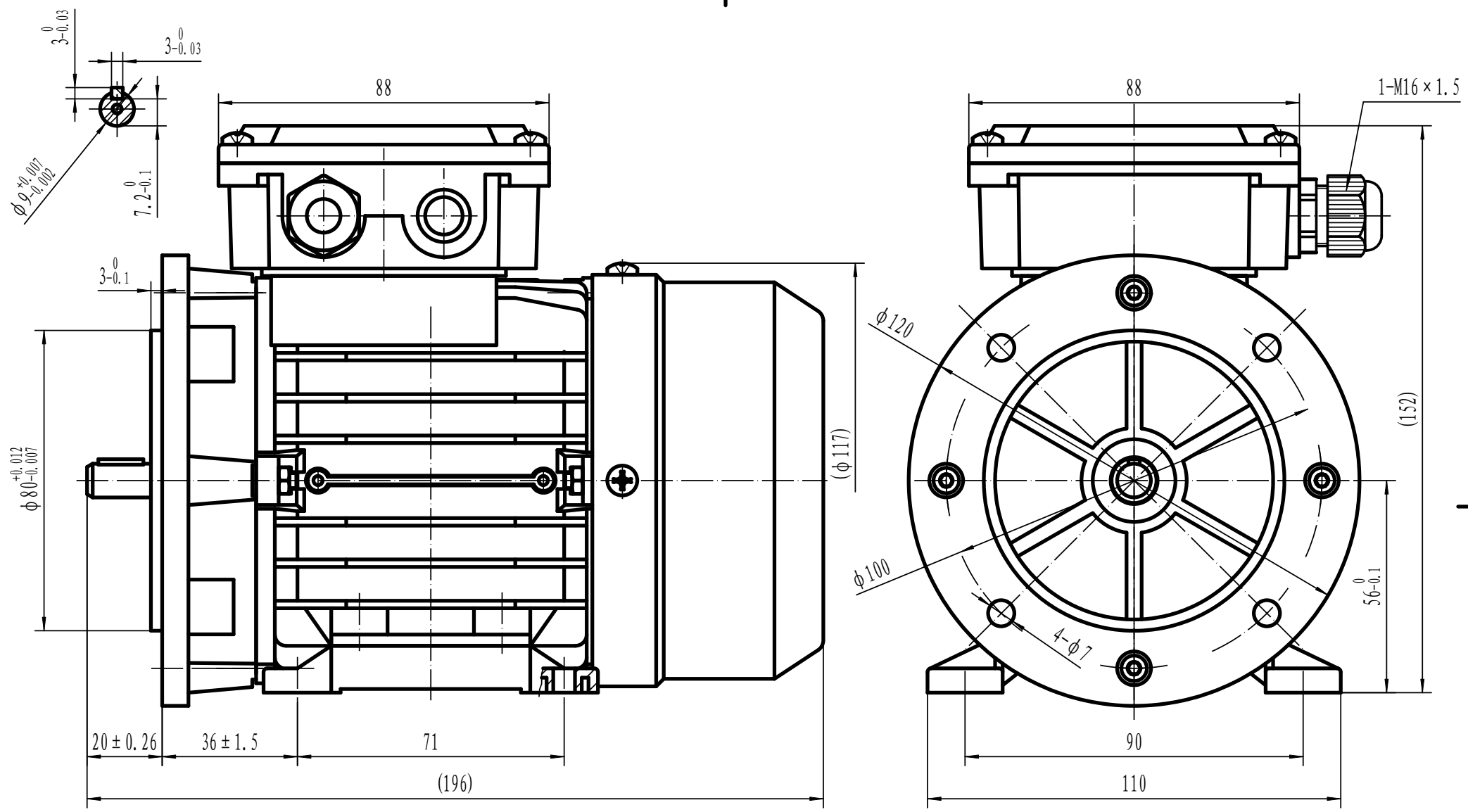


| | | |
|---|---|---|
| Drawn By | Date | **TECA 56 B35** |
| TECHTOP | 27/11/2017 | |
| Approved by | Date | |
| L. Overton | 27/11/2017 | |
| Issue No = | Date | |
| 001/A | 27/11/2017 | |

www.tecmotors.co.uk