Motors | Energy | Automation | Coatings

Frequency Inverter

Convertidor de Frecuencia

Inversor de Freqüência

Frequenzumrichter

Variateur de Vitesse

Преодразователь частоты

Frequentie Regelaar

Frekvensomvandlare

CFW-08

User's Guide
Manual del Usuario
Manual do Usuário
Bedienungsanleitung
Manuel d'utilisation
Руководство пользователя
Gebruikers Handleiding
Användarinstruktioner

FREQUENCY INVERTER MANUAL

Series: CFW-08

Software: version 5.2X

Language: English

Document: 0899.5242 / 09

03/2009

ATTENTION!

It is very important to check if the inverter software version is the same as indicated above.

The table below describes all revisions made to this manual.

Revision	Description	Section
1	First Edition	-
2	Inclusion of the item 3.3 - European EMC Directive - Requirements for Conforming Installations	Refer to item 3.3
3	General Revision	-
4	External Parallel Keypad and Fix Kit included and General Revision	Refer to item 8.3 and 8.18
5	Description changed of the Parallel Cable for the External Parallel Keypad Item 7.5 (Spare Part List) removed Parameter P536 included and General Revision	Refer to item 8.5 Refer to item 6.3.5
6	General Revision	-
7	Inclusion of new models (22 A, 28 A and 33 A/200-240 V; 24 A and 30 A/380-480 V) Addition of new I/O functions on the control board Modification of circuit breakers table Modification of chapter 3 (installation and connections) Modification of parameters incompatibility table Addition of parameters P253, P267 and P268 Addition of new functions at parameters P235, P239, P295 and P404 Modification of factory default value of parameter P248 Addition of error code E32	Refer to item 9.1 Refer to item 3.2.5 Refer to item 3.2.3 Refer to item 4.2.4 Refer to item 6.3 Refer to item 6.3.3 Refer to item 7.1
8	General Revision Inclusion of items into the table of parameters incompatibility Change on the WEG part number of the optional devices Inclusion of the table containing the airflow requirements for panel mounting Inclusion of the following optionals: KRS-485-CFW08, KFB-CO-CFW08, KFB-DN-CFW08 and KAC-120-CFW08 Inclusion of the new versions of the control board: A3 and A4	Refer to item 4.2.4 Refer to chapter 8 Refer to item 3.1.3.1 Refer to chapter 8 Refer to item 2.4
9	The Sleep function was added (parameters P212, P213 and P535) The Analog Input Dead Zone function was added (P233) The KDC-24VR-CFW08 and KDC-24V-CFW08 option modules were added New EMC filters were added Notes on the CFW-08 Nema 4X and the 575 V lines were added Modification of the gain equation for the analog inputs General revision	Refer to chapter 6 Refer to items 8.9 and 8.10 Refer to item 3.3.4 Refer to chapter 2.4 -

Quick Parameter Reference, Fault and Status Messages

I Parameters 8
II Fault Messages 16
III Other Messages 16

CHAPTER 1
Safety Notices

1.1 Safety Notices in the Manual 17
1.2 Safety Notices on the Product 17
1.3 Preliminary Recommendations 17

CHAPTER 2
General Information

2.1 About this Manual 19
2.2 Software Version 19
2.3 About the CFW-08 20
2.4 CFW-08 Identification 24
2.5 Receiving and Storing 27

CHAPTER 3
Installation and Connection

3.1 Mechanical Installation 28
3.1.1 Environment 28
3.1.2 Mounting Specifications 28
3.1.3 Positioning and Fixing 31
3.1.3.1 Panel Mounting 32
3.1.3.2 Surface Mounting 33
3.2 Electrical Installation 33
3.2.1 Power / Grounding Terminals 33
3.2.2 Location of the Power Terminals, Grounding Terminals and Control Terminal Connections 35
3.2.3 Power/Grounding Wiring and Circuit Breakers .. 36
3.2.4 Power Connections 37
3.2.4.1 AC Input Connection 39
3.2.4.2 Output Connections 40
3.2.4.3 Grounding Connections 40
3.2.5 Signal and Control Connections 42
3.2.5.1 Digital Inputs as Low Level Active (S1:1 to OFF) 46
3.2.5.2 Digital Input as High Level Active (S1:1 to ON) 47
3.2.6 Typical Terminal Connections 48
3.3 European EMC Directive - Requirements for Conforming Installations 51
3.3.1 Installation 51

3.3.2 Emission and Immunity Levels Description 52
3.3.3 Inverter Models and Filters 54
3.3.4 EMC Filters Characteristics 57

CHAPTER 4

Keypad (HMI) Operation

4.1 Keypad (HMI) Description 67
4.2 Use of the Keypad (HMI) 68
4.2.1 Keypad Operation 69
4.2.2 Inverter Status 70
4.2.3 Read-Only Parameters 71
4.2.4 Parameter Viewing and Programming 71

CHAPTER 5

Start-up

5.1 Pre-Power Checks 74
5.2 Initial Power-up 74
5.3 Start-up 75
5.3.1 Start-up Operation via Keypad (HMI) - Type of Control: Linear V/F (P202 = 0) 76
5.3.2 Start-up Operation via Terminals - Control Mode: Linear V/F (P202 = 0) 77
5.3.3 Start-up Operation via Keypad - Control Mode: Vector (P202 = 2) 78

CHAPTER 6

Detailed Parameter Description

6.1 Symbols 83
6.2 Introduction 83
6.2.1 Control Modes (V/F and Vector) 83
6.2.2 V/F Control 83
6.2.3 Vector Control (VVC) 84
6.2.4 Frequency Reference Sources 85
6.2.5 Commands 88
6.2.6 Local/Remote Operation Modes 88
6.3 Parameter Listing 89
6.3.1 Access and Read-only Parameters - P000 to P099 90
6.3.2 Regulation Parameters - P100 to P199 92
6.3.3 Configuration Parameters - P200 to P398 102
6.3.4 Motor Parameters - P399 to P499 128
6.3.5 Special Function Parameters - P500 to P599 .. 131
6.3.5.1 Introduction 131
6.3.5.2 Description 131
6.3.5.3 PID Start-up Guide 134

CHAPTER 7
Diagnostics and Troubleshooting

7.1 Faults and Possible Causes 141
7.2 Troubleshooting 144
7.3 Contacting WEG 145
7.4 Preventive Maintenance 145
7.4.1 Cleaning Instructions 146

CHAPTER 8
CFW-08 Options and Accessories

8.1 HMI-CFW08-P 149
8.1.1 Instructions for Insertion and Removing of the HMI-CFW08-P 149
8.2 TCL-CFW08 149
8.3 HMI-CFW08-RP 150
8.3.1 HMI-CFW08-RP Installation 150
8.4 MIP-CFW08-RP 151
8.5 CAB-RP-1, CAB-RP-2, CAB-RP-3, CAB-RP-5, CAB-RP-7.5, CAB-RP-10 151
8.6 HMI-CFW08-RS 151
8.6.1 HMI-CFW08-RS Installation 152
8.6.2 HMI-CFW08-RS Start-up 152
8.6.3 Keypad Copy Function 153
8.7 MIS-CFW08-RS 153
8.8 CAB-RS-1, CAB-RS-2, CAB-RS-3, CAB-RS-5, CAB-RS-7.5, CAB-RS-10 153
8.9 KDC-24VR-CFW08 154
8.10 KDC-24V-CFW08 155
8.11 KCS-CFW08 156
8.11.1 Instructions for KCS-CFW08 Insertion and Removal 157
8.12 KSD-CFW08 157
8.13 KRS-485-CFW08 158
8.14 KFB-CO-CFW08 159
8.15 KFB-DN-CFW08 160
8.16 KAC-120-CFW08, KAC-120-CFW08-N1M1 KAC-120-CFW08-N1M2 162
8.17 KMD-CFW08-M1 163
8.18 KFIX-CFW08-M1, KFIX-CFW08-M2 164
8.19 KN1-CFW08-M1, KN1-CFW08-M2 165
8.20 RFI Filter 166
8.21 Line Reactor 167
8.21.1 Application Criteria 167
8.22 Load Reactor 170
8.23 Dynamic Braking 171
8.23.1 Resistor Sizing 171
8.23.2 Installation 172
8.24 Serial Communication 173

8.24.1 Introduction 173
8.24.2 RS-485 and RS-232 Interfaces Description . 174
8.24.2.1 RS-485 175
8.24.2.2 RS-232 176
8.24.3 Definitions 176
8.24.3.1 Used Terms 176
8.24.3.2 Parameter/Variables Resolution 177
8.24.3.3 Character Format 177
8.24.3.4 Protocol 177
8.24.3.5 Execution and Message Test 180
8.24.3.6 Message Sequence 180
8.24.3.7 Variable Code 180
8.24.4 Message Examples 181
8.24.5 Variables and Errors of the Serial Communication 181
8.24.5.1 Basic Variables 181
8.24.5.2 Message Examples with Basic Variables 184
8.24.5.3 Parameters Related to the Serial Communication 185
8.24.5.4 Errors Related to the Serial Communication 186
8.24.6 Time for Read/Write of Messages 186
8.24.7 Physical Connection RS-232 and RS-485 187
8.25 Modbus-RTU 188
8.25.1 Introduction to Modbus-RTU Protocol 188
8.25.1.1 Transmission Modes 188
8.25.1.2 Message Structure in RTU Mode 188
8.25.2 Operation of the CFW-08 in the Modbus-RTU Network 191
8.25.2.1 RS-232 and RS-485 Interface Description 191
8.25.2.2 Inverter Configuration in the Modbus-RTU Network 191
8.25.2.3 Access to the Inverter Data 192
8.25.3 Detailed Function Description 195
8.25.3.1 Function 01 - Read Coils 195
8.25.3.2 Function 03 - Read Holding Register 196
8.25.3.3 Function 05 - Write Single Coil 197
8.25.3.4 Function 06 - Write Single Register .. 198
8.25.3.5 Function 15 - Write Multiple Coils 198
8.25.3.6 Function 16 - Write Multiple Registers 199
8.25.3.7 Function 43 - Read Device Identification 200
8.25.4 Modbus-RTU Communication Errors 202
8.25.4.1 Error Messages 203

CHAPTER 9
Technical Specifications

9.1 Power Data 204
9.1.1 200-240 V Power Supply 204
9.1.2 380-480 V Power Supply 205
9.2 Electronics/General Data 208
9.3 WEG Standard IV-Pole Motor Data 209

QUICK PARAMETER REFERENCE, FAULT AND STATUS MESSAGES

Software: V5.2X
Application:
Model:
Serial Number:
Responsible:
Date: / / .

I. Parameters

Parameter	Function	Adjustable Range	Factory Setting	Unit	User Setting	Page
P000	Parameter Access	0 to 4 = Read 5 = Alteration 6 to 999 = Read	0	-		90
	READ ONLY PARAMETERS - P002 to P099					
P002	Frequency Proportional Value (P208xP005)	0 to 6553	-	-		90
P003	Motor Output Current	0 to 1.5xI_{nom}	-	A		90
P004	DC Link Voltage	0 to 862	-	V		90
P005	Motor Output Frequency	0.00 to 300.0	-	Hz		90
P007	Motor Output Voltage	0 to 600	-	V		90
P008	Heatsink Temperature	25 to 110	-	°C		91
P009 (1)	Motor Torque	0.0 to 150.0	-	%		91
P014	Last Fault	00 to 41	-	-		91
P023	Software Version	x . y z	-	-		91
P040	PID Process Variable (Value % x P528)	0 to 6553	-	-		91
	REGULATION PARAMETERS - P100 to P199					
	Ramps					
P100	Acceleration Time	0.1 to 999	5.0	s		92
P101	Deceleration Time	0.1 to 999	10.0	s		92
P102	Ramp 2 Acceleration Time	0.1 to 999	5.0	s		92
P103	Ramp 2 Deceleration Time	0.1 to 999	10.0	s		92
P104	S Ramp	0 = Inactive 1 = 50 % 2 = 100 %	0	-		92
	Frequency Reference					
P120	Digital Reference Backup	0 = Inactive 1 = Active 2 = Backup by P121	1	-		93
P121	Keypad Reference	P133 to P134	3.00	Hz		93
P122	JOG Speed Reference	0.00 to P134	5.00	Hz		94
P124	Multispeed Reference 1	P133 to P134	3.00	Hz		94
P125	Multispeed Reference 2	P133 to P134	10.00	Hz		94
P126	Multispeed Reference 3	P133 to P134	20.00	Hz		94
P127	Multispeed Reference 4	P133 to P134	30.00	Hz		95
P128	Multispeed Reference 5	P133 to P134	40.00	Hz		95
P129	Multispeed Reference 6	P133 to P134	50.00	Hz		95
P130	Multispeed Reference 7	P133 to P134	60.00	Hz		95
P131	Multispeed Reference 8	P133 to P134	66.00	Hz		95

Parameter	Function	Adjustable Range	Factory Setting	Unit	User Setting	Page
	Speed Limits					
P133	Minimum Frequency (F_{min})	0.00 to P134	3.00	Hz		95
P134	Maximum Frequency (F_{max})	P133 to 300.0	66.00	Hz		96
	V/F Control					
P136 (2) (*)	Manual Torque Boost (IxR Compensation)	0.0 to 30.0	5.0 or 2.0 or 1.0 (*)	%		96
P137 (2)	Automatic Torque Boost (Automatic IxR Compensation)	0.00 to 1.00	0.00	-		97
P138 (2)	Slip Compensation	0.0 to 10.0	0.0	%		97
P142 (2) (3)	Maximum Output Voltage	0 to 100	100	%		98
P145 (2) (3)	Field Weakening Frequency (F_{nom})	P133 to P134	50.00 Hz or 60.00 Hz depending on the market	Hz		98
	DC Link Voltage Regulation					
P151	DC Link Voltage Regulation Level	200 V models: 325 to 410 400 V models: 564 to 820	380 780	V		99
	Overload Current					
P156	Motor Overload Current	$0.2xI_{nom}$ to $1.3xI_{nom}$	1.2xP401	A		100
	Current Limitation					
P169	Maximum Output Current	$0.2xI_{nom}$ to $2.0xI_{nom}$	1.5xP295	A		101
	Flux Control					
P178 (1)	Rated Flux	50.0 to 150	100	%		101
	CONFIGURATION PARAMETERS - P200 to P398					
	Generic Parameters					
P202 (3)	Control Mode	0 = Linear V/F Control (Scalar) 1 = Quadratic V/F Control (Scalar) 2 = Sensorless Vector Control	0	-		102
P203 (3)	Special Function Selection	0 = No function 1 = PID Regulator	0	-		103
P204 (3)	Load Factory Setting	0 to 4 = No Function 5 = Loads Factory Default	0	-		104
P205	Display Default Selection	0 = P005 1 = P003 2 = P002 3 = P007 4, 5 = Not Used 6 = P040	2	-		104
P206	Auto-Reset Time	0 to 255	0	s		104
P208	Reference Scale Factor	0.00 to 99.9	1.00	-		104
P212	Frequency to Enable the Sleep Mode	0.00 to P134	0.00	Hz		105
P213	Time Delay to Activate the Sleep Mode	0.1 to 999	2.0	s		105
P215 (3) (4)	Keypad Copy Function	0 = Not Used 1 = Copy (inverter → keypad) 2 = Paste (keypad → inverter)	0	-		106
P219 (3)	Switching Frequency Reduction Point	0.00 to 25.00	6.00	Hz		107

(*) The factory default of parameter P136 depends on the inverter model as follows:
- models 1.6-2.6-4.0-7.0 A/200-240 V and 1.0-1.6-2.6-4.0 A/380-480 V: P136 = 5.0 %;
- models 7.3-10-16 A/200-240 V and 2.7-4.3-6.5-10 A/380-480 V: P136 = 2.0 %;
- models 22-28-33 A/200-240 V and 13-16-24-30 A/380-480 V: P136 = 1.0 %.

Parameter	Function	Adjustable Range	Factory Setting	Unit	User Setting	Page
	Local/Remote Definition					
P220 (3)	Local/Remote Selection Source	0 = Always Local 1 = Always Remote 2 = HMI-CFW08-P or HMI-CFW08-RP Keypad (default: local) 3 = HMI-CFW08-P or HMI-CFW08-RP Keypad (default: remote) 4 = DI2 to DI4 5 = Serial or HMI-CFW08-RS Keypad (default: local) 6 = Serial or HMI-CFW08-RS Keypad (default: remote)	2	-		108
P221 (3)	Frequency Local Reference Selection	0 = Keypad ▲ and ▼ 1 = AI1 2, 3 = AI2 4 = E.P. 5 = Serial 6 = Multispeed 7 = Add AI ≥ 0 8 = Add AI	0	-		109
P222 (3)	Frequency Remote Reference Selection	0 = Keypad ▲ and ▼ 1 = AI1 2, 3 = AI2 4 = E.P. 5 = Serial 6 = Multispeed 7 = Add AI ≥ 0 8 = Add AI	1	-		109
P229 (3)	Local Command Selection	0 = HMI-CFW08-P or HMI-CFW08-RP Keypad 1 = Terminals 2 = Serial or HMI-CFW08-RS Keypad	0	-		109
P230 (3)	Remote Command Selection	0 = HMI-CFW08-P or HMI-CFW08-RP Keypad 1 = Terminals 2 = Serial or HMI-CFW08-RS Keypad	1	-		109
P231 (3)	Forward/Reverse Selection - Local and Remote	0 = Forward 1 = Reverse 2 = Commands 3 = DIx	2	-		110
	Analog Input (s)					
P233	Analog Input Dead Zone	0 = Inactive 1 = Active	1	-		110
P234	Analog Input AI1 Gain	0.00 to 9.99	1.00	-		111
P235 (3) (5)	Analog Input AI1 Function	0 = (0 to 10) V/(0 to 20) mA / (-10 to +10) V(**) 1 = (4 to 20) mA 2 = DI5 PNP 3 = DI5 NPN 4 = DI5 TTL 5 = PTC	0	-		112

(**) Only available on the control board A2 (refer to item 2.4). For programming instructions, please, refer to the parameter P235 detailed description.

Parameter	Function	Adjustable Range	Factory Setting	Unit	User Setting	Page
P236	Analog Input AI1 Offset	-999 to +999	0.0	%		113
P238 (6)	Analog Input AI2 Gain	0.00 to 9.99	1.00	-		113
P239 (3)(5)(6)	Analog Input AI2 Function	0 = (0 to 10) V/(0 to 20) mA/ (-10 to +10) V(**) 1 = (4 to 20) mA 2 = DI6 PNP 3 = DI6 NPN 4 = DI6 TTL 5 = PTC	0	-		113
P240 (6)	Analog Input AI2 Offset	-999 to +999	0.0	%		113
P248	Analog Inputs Filter Time Constant	0 to 200	10	ms		113
	Analog Output					
P251 (6)	Analog Output AO Function	0 = Output Frequency (Fs) 1 = Input Reference (Fe) 2 = Output Current (Is) 3, 5, 8 = Not Used 4 = Motor Torque 6 = Process Variable (PID) 7 = Active Current 9 = PID Setpoint	0	-		114
P252 (6)	Analog Output AO Gain	0.00 to 9.99	1.00	-		114
P253	Analog Output AO Signal	0 = (0 to 10) V/(0 to 20) mA 1 = (4 to 20) mA	0	-		114
	Digital Inputs					
P263 (3)	Digital Input DI1 Function	0 = No Function or General Enable 1 to 7 and 10 to 12 = General Enable 8 = Forward Run 9 = Start/Stop 13 = FWD Run Using Ramp 2 14 = On	0	-		115
P264 (3)	Digital Input DI2 Function	0 = Forward/Reverse 1 = Local/Remote 2 to 6 and 9 to 12 = Not Used 7 = Multispeed (MS2) 8 = Reverse 13 = REV Run - Ramp 2 14 = Off	0	-		115
P265 (3) (7)	Digital Input DI3 Function	0 = Forward/Reverse 1 = Local/Remote 2 = General Enable 3 = JOG 4 = No External Fault 5 = Increase E.P. 6 = Ramp 2 7 = Multispeed (MS1) 8 = No Function or Start/Stop 9 = Start/Stop 10 = Reset	10	-		115

(**) Only available on the control board A2 (refer to item 2.4). For programming instructions, please, refer to the parameter P235 detailed description.

Parameter	Function	Adjustable Range	Factory Setting	Unit	User Setting	Page
		11, 12 = Not Used 13 = Flying Start Disable 14 = Multispeed (MS1) Using Ramp 2 15 = Manual/Automatic (PID) 16 = Increase E.P. with Ramp 2				
P266 (3)	Digital Input DI4 Function	0 = Forward/Reverse 1 = Local/Remote 2 = General Enable 3 = JOG 4 = No External Fault 5 = Decrease E.P. 6 = Ramp 2 7 = Multispeed (MS0) 8 = Not Used or Start/Stop 9 = Start/Stop 10 = Reset 11, 12, 14 and 15 = Not Used 13 = Flying Start Disable 16 = Decrease E.P. with Ramp 2	8	-		115
P267 (3) (5)	Function of the Digital Input DI5 (only displayed when P235 = 2, 3 or 4)	0 = FWD/REV 1 = Local/Remote 2 = General Enable 3 = JOG 4 = No External Fault 5 = Increase E.P. 6 = Ramp 2 7 = Multispeed (MS2) 8 = No Function or Start/Stop 9 = Start/Stop 10 = Reset 11 and 12 = Not Used 13 = Disables Flying Start 14 and 15 = Not Used 16 = Increase E.P. with Ramp 2	11	-		115
P268 (3) (5) (6)	Function of the Digital Input DI6 (only displayed when P239 = 2, 3 or 4)	0 = FWD/REV 1 = Local/Remote 2 = General Enable 3 = JOG 4 = No External Fault 5 = Decrease E.P. 6 = Ramp 2 7 = Not Used 8 = No Function or Start/Stop 9 = Start/Stop 10 = Reset 11 and 12 = Not Used 13 = Disables Flying Start 14 and 15 = Not Used 16 = Decrease E.P. with Ramp 2	11	-		115

Parameter	Function	Adjustable Range	Factory Setting	Unit	User Setting	Page
	Digital Output(s)					
P277 (3)	Relay Output RL1 Function	0 = Fs > Fx 1 = Fe > Fx 2 = Fs = Fe 3 = Is>Ix 4 and 6 = Not Used 5 = Run 7 = No Fault	7	-		120
P279 (3) (6)	Relay Output RL2 Function	0 = Fs > Fx 1 = Fe > Fx 2 = Fs = Fe 3 = Is > Ix 4 and 6 = Not Used 5 = Run 7 = No Fault	0	-		120
		Fx and Ix				
P288	Fx Frequency	0.00 to P134	3.00	Hz		122
P290	Ix Current	0 to 1.5xI_{nom}	1.0xI_{nom}	A		122
	Inverter Data					
P295 (3)	Rated Inverter Current (I_{nom})	300 = 1.0 A 301 = 1.6 A 302 = 2.6 A 303 = 2.7 A 304 = 4.0 A 305 = 4.3 A 306 = 6.5 A 307 = 7.0 A 308 = 7.3 A 309 = 10 A 310 = 13 A 311 = 16 A 312 = 22 A 313 = 24 A 314 = 28 A 315 = 30 A 316 = 33 A	According to the inverter model	-		122
P297 (3)	Switching Frequency	4 = 5.0 5 = 2.5 6 = 10 7 = 15 (*)	4	kHz		122
	DC Braking					
P300	DC Braking Time	0.0 to 15.0	0.0	s		124
P301	DC Braking Start Frequency	0.00 to 15.00	1.00	Hz		124
P302	DC Braking Current	0.0 to 130	0.0	%		124
	Skip Frequencies					
P303	Skip Frequency 1	P133 to P134	20.00	Hz		125
P304	Skip Frequency 2	P133 to P134	30.00	Hz		125
P306	Skip Band Range	0.00 to 25.00	0.00	Hz		125
	Serial Communication Interface I					
P308 (3)	Inverter Address	1 to 30 (Serial WEG) 1 to 247 (Modbus-RTU)	1	-		125
	Flying Start and Ride-Through					
P310 (3)	Flying Start and Ride-Through	0 = Inactive 1 = Flying Start 2 = Flying Start and Ride-Through 3 = Ride-Through	0	-		126

(*) It is not possible to set P297 = 7 (15 kHz) in vector control mode (P202 = 2) or when the external serial keypad (HMI-CFW08-RS) is used.

Parameter	Function	Adjustable Range	Factory Setting	Unit	User Setting	Page
P311	Voltage Ramp	0.1 to 10.0	5.0	s		126
	Serial Communication Interface II					
P312 (3)	Serial Interface Protocol	0 = Serial WEG 1 = Modbus-RTU 9600 bps without parity 2 = Modbus-RTU 9600 bps with odd parity 3 = Modbus-RTU 9600 bps with even parity 4 = Modbus-RTU 19200 bps without parity 5 = Modbus-RTU 19200 bps with odd parity 6 = Modbus-RTU 19200 bps with even parity 7 = Modbus-RTU 38400 bps without parity 8 = Modbus-RTU 38400 bps with odd parity 9 = Modbus-RTU 38400 bps with even parity	0	-		127
P313	Serial Interface Watchdog Action	0 = Disabling by ramp 1 = General disable 2 = Shows only E28 3 = Goes to local mode	2	-		127
P314	Serial Interface Watchdog Timeout	0.0 = Disables the function 0.1 to 99.9 = Set value	0.0	s		128
	MOTOR PARAMETERS - P399 to P499					
	Rated Parameters					
P399 (1) (3)	Rated Motor Efficiency	50.0 to 99.9	According to the inverter model (motor matched to the inverter - refer to item 9.3) and sales market	%		128
P400 (1) (3)	Rated Motor Voltage	0 to 600		V		128
P401	Rated Motor Current	0.3xP295 to 1.3xP295		A		128
P402 (1)	Rated Motor Speed	0 to 9999		rpm		129
P403 (1) (3)	Rated Motor Frequency	0.00 to P134		Hz		129
P404 (1) (3)	Rated Motor Power	0 = 0.16 HP / 0.12 kW 1 = 0.25 HP / 0.18 kW 2 = 0.33 HP / 0.25 kW 3 = 0.50 HP / 0.37 kW 4 = 0.75 HP / 0.55 kW 5 = 1 HP / 0.75 kW 6 = 1.5 HP / 1.1 kW 7 = 2 HP / 1.5 kW 8 = 3 HP / 2.2 kW 9 = 4 HP / 3.0 kW 10 = 5 HP / 3.7 kW 11 = 5.5 HP / 4.0 kW 12 = 6 HP / 4.5 kW 13 = 7.5 HP / 5.5 kW 14 = 10 HP / 7.5 kW 15 = 12.5 HP / 9.2 kW 16 = 15 HP / 11.2 kW 17 = 20 HP / 15.0 kW		-		129

Parameter	Function	Adjustable Range	Factory Setting	Unit	User Setting	Page
P407 (3)	Rated Motor Power Factor	0.50 to 0.99	According to the inverter model (refer to item 9.3)	-		130
	Measured Parameters					
P408 (1) (3)	Run Self-Tuning	0 = No 1 = Yes	0	-		130
P409 (3)	Motor Stator Resistance	0.00 to 99.99	According to the inverter model	Ω		130
	SPECIAL FUNCTION - P500 to P599					
	PID Regulator					
P520	PID Proportional Gain	0.000 to 7.999	1.000	-		138
P521	PID Integral Gain	0.000 to 9.999	1.000	-		138
P522	PID Differential Gain	0.000 to 9.999	0.000	-		138
P525	Setpoint (Via Keypad) of the PID Regulator	0.00 to 100.0	0.00	%		138
P526	Process Variable Filter	0.01 to 10.00	0.10	s		138
P527	PID Action	0 = Direct 1 = Reverse	0	-		138
P528	Process Variable Scale Factor	0.00 to 99.9	1.00	-		139
P535	Wake up Band	0.00 to 100.00	1.00	%		139
P536	Automatic Setting of P525	0 = Active 1 = Inactive	0	-		140

Notes found on the Quick Parameter Reference:

(1) This parameter is only displayed in vector mode (P202 = 2).
(2) This parameter is only displayed in scalar mode P202 = 0 or 1.
(3) This parameter can be changed only when the inverter is disabled (stopped motor).
(4) This parameter is only available with HMI-CFW08-RS.
(5) The analog input value is represented by zero when it is not connected to an external signal. In order to use an analog input as a digital input with NPN logic (P235 or P239 = 3), it is necessary to connect a 10 kΩ resistor from terminal 7 to 6 (AI1) or 8 (AI2) of the control terminal strip.
(6) This parameter is only available in the CFW-08 Plus version.
(7) The parameter value changes automatically when P203 = 1.

II. Fault Messages

Display	Description	Page
E00	Output overcurrent/short-circuit/output ground fault	141
E01	DC link overvoltage	141
E02	DC link undervoltage	142
E04	Overtemperature at the power heatsink or in the inverter internal air	142
E05	Output overload (Ixt function)	142
E06	External fault	142
E08	CPU error (Watchdog)	142
E09	Program memory error (Checksum)	142
E10	Keypad copy function error	142
E14	Self-tuning routine (estimation of the motor parameters) error	142
E22, E25, E26 and E27	Serial communication error	142
E24	Programming error	142
E28	Serial interface Watchdog timeout error	143
E31	Keypad connection fault (HMI-CFW08-RS)	143
E32	Motor overtemperature (external PTC)	143
E41	Self-diagnosis fault	143

III. Other Messages

Display	Description
rdy	Inverter is ready to be enabled
Sub	Power supply voltage is too low for the inverter operation (undervoltage)
dcbr	Inverter in DC braking mode
auto	Inverter is running self-tuning routine
copy	Keypad copy function in progress (only available in the HMI-CFW08-RS) - inverter to keypad
past	Keypad copy function in progress (only available in the HMI-CFW08-RS) - keypad to inverter
Srdy	Inverter in the sleep rdy mode

SAFETY NOTICES

This Manual contains necessary information for the correct use of the CFW-08 frequency inverter.
This Manual was developed for qualified personnel with suitable training and technical qualification to operate this type of equipment.

1.1 SAFETY NOTICES IN THE MANUAL

The following safety notices are used in this manual:

DANGER!
If the recommended safety notices are not strictly observed, it can lead to serious or fatal injuries of personnel and/or material damage.

ATTENTION!
Failure to observe the recommended safety procedures can lead to material damage.

NOTE!
This notice provides important information for the proper understanding and operation of the equipment.

1.2 SAFETY NOTICES ON THE PRODUCT

The following symbols may be attached to the product, serving as safety notice:

High Voltages.

Components sensitive to electrostatic discharge. Do not touch them without proper grounding procedures.

Mandatory connection to ground protection (PE).

Shield connection to ground.

1.3 PRELIMINARY RECOMMENDATIONS

DANGER!
Only qualified personnel should plan or implement the installation, start- up, operation and maintenance of this equipment. Personnel must review entire Manual before attempting to install, operate or troubleshoot the CFW-08.
These personnel must follow all safety instructions included in this manual and/or defined by local regulations.
Failure to comply with these instructions may result in personnel injury and/or equipment damage.

NOTE!
In this manual, qualified personnel are defined as people that are trained to:

1. Install, ground, power up and operate the CFW-08 according to this manual and the local required safety procedures;
2. Use of safety equipment according to the local regulations;
3. Administer First Aid.

DANGER!
The inverter control circuit (ECC3, DSP) and the HMI-CFW08-P are high voltage circuits and are not grounded.

DANGER!
Always disconnect the supply voltage before touching any electrical component inside the inverter.
Many components are charged with high voltage and/or in movement (fans), even after the incoming AC power supply has been disconnected or switched OFF. Wait at least 10 minutes for the total discharge of the power capacitors.
Always connect the frame of the equipment to the ground (PE) at the suitable connection point.

ATTENTION!
All electronic boards have components that are sensitive to electrostatic discharges. Never touch any of the electrical components or connectors without following proper grounding procedures. If necessary to do so, touch the properly grounded metallic frame or use a suitable ground strap.

Do not apply high voltage (high pot) test on the inverter!
If this test is necessary, contact WEG.

NOTE!
Inverters can interfere with other electronic equipment. In order to reduce this interference, adopt the measures recommended in chapter 3 - Installation and Connection.

NOTE!
Read this entire manual before installing or operating the CFW-08.

GENERAL INFORMATION

This chapter defines the contents and purposes of this manual and describes the main characteristics of the CFW-08 frequency inverter. Identification, receiving inspections and storage requirements are also provided.

2.1 ABOUT THIS MANUAL

This manual is divided into 9 chapters, providing information to the user on how receive, install, start-up and operate the CFW-08.

Chapter 1 - Safety notices.
Chapter 2 - General information and receiving the CFW-08.
Chapter 3 - RFI filters, mechanical and electrical installation (power and control circuit).
Chapter 4 - Using the keypad (Human Machine Interface - HMI).
Chapter 5 - Start-up and steps to follow.
Chapter 6 - Setup and read only parameters detailed description.
Chapter 7 - Solving problems, cleaning instructions and preventive maintenance.
Chapter 8 - CFW-08 optional devices description, technical characteristics and installation.
Chapter 9 - CFW-08 ratings, tables and technical information.

This manual provides information for the correct use of the CFW-08. This frequency inverter is very flexible and allows the operation in many different modes as described in this manual.
As the CFW-08 can be applied in several ways, it is impossible to describe here all of the application possibilities. WEG does not accept any responsibility when the CFW-08 is not used according to this manual.
No part of this manual may be reproduced in any form, without the written permission of WEG.

2.2 SOFTWARE VERSION

It is important to note the software version installed in the CFW-08, since it defines the functions and the programming parameters of the inverter.
This manual refers to the software version indicated on the inside cover. For example, the version 3.0X applies to versions 3.00 to 3.09, where “X” is a variable that will change due to minor software revisions. The operation of the CFW-08 with these software revisions are still covered by this version of the manual.

The software version can be read in the parameter P023.

2.3 ABOUT THE CFW-08

The CFW-08 frequency inverter provides two control options: vector control (VVC: voltage vector control) or V/F (scalar); both types of control can be set according to the application.

In the vector control mode, the motor performance is optimized relating to torque and speed regulation.
The "Self-Tuning" function, available in vector control, permits the automatic setting of the inverter parameter from the identification (also automatic) of the parameters of the motor connected at the inverter output.

The V/F (scalar) mode is recommended for simpler applications such as pump and fan drives. In these cases one can reduce the motor and inverter losses by using the "Quadratic V/F" option, that results in energy saving.
The V/F mode is also used when more than one motor should be driven simultaneously by one inverter (multimotor application).

For power ratings and further technical information, refer to Chapter 9.

The block diagram below gives a general overview of the CFW-08.

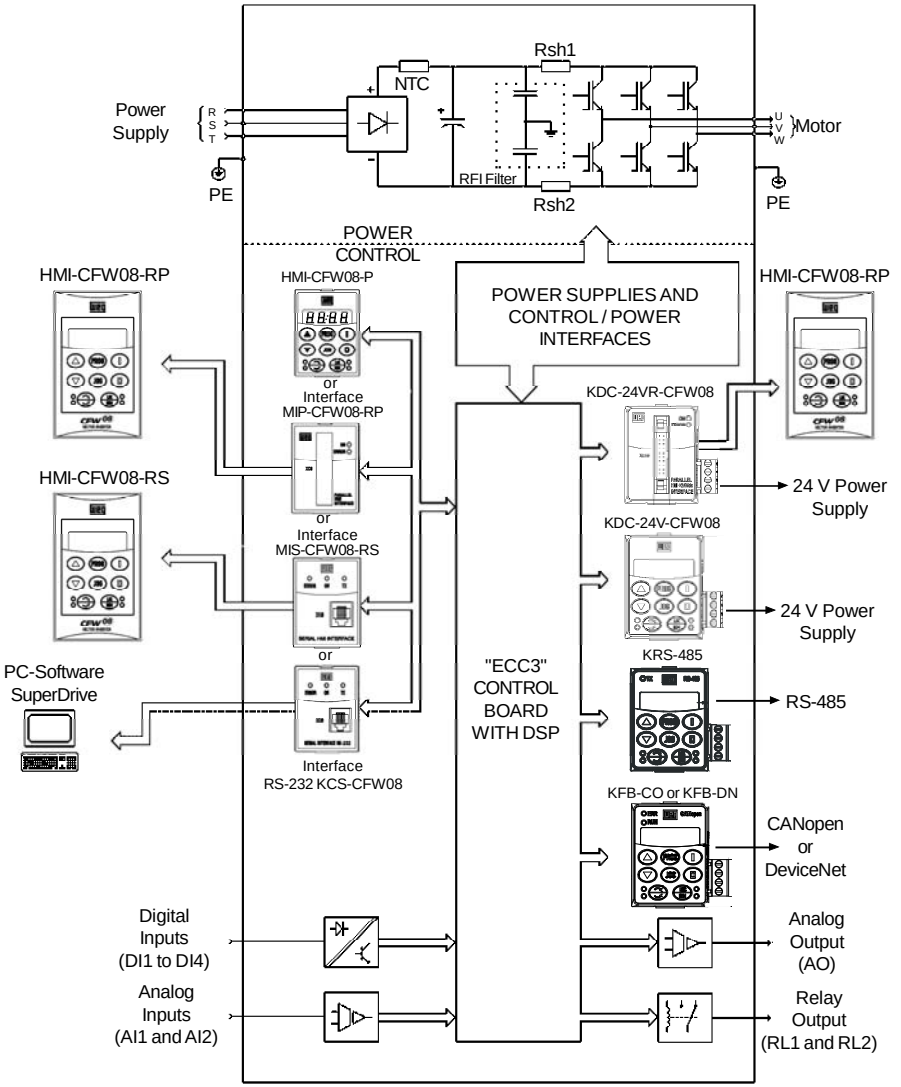

Figure 2.1 *- Block diagram for the models:*
1.6-2.6-4.0-7.0 A/200-240 V and 1.0-1.6-2.6-4.0 A/380-480 V

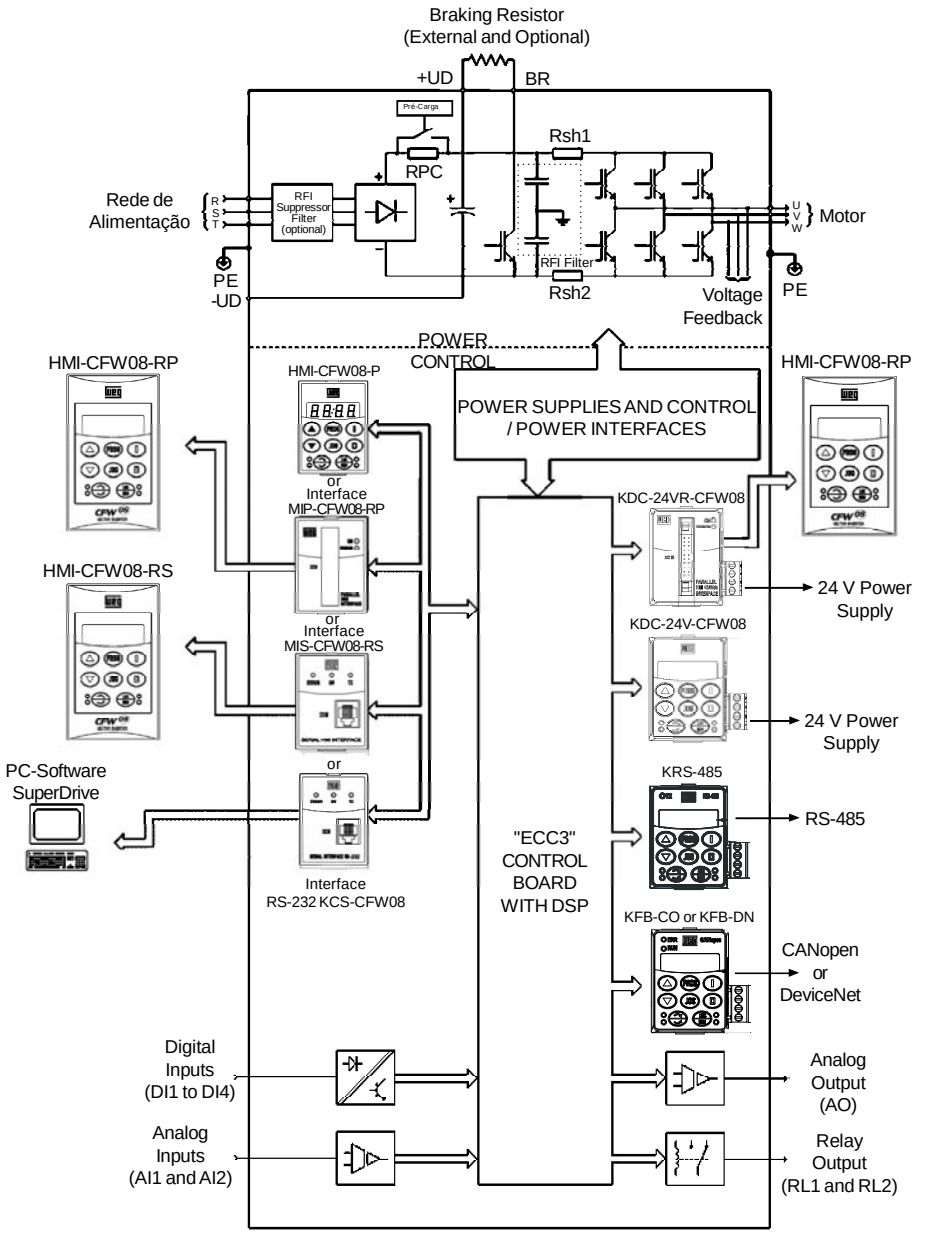

Figure 2.2 *- Block diagram for the models:*
7.3-10-16-22 A/200-240 V and 2.7-4.3-6.5-10-13-16 A/380-480 V
Note: *models 16 A and 22 A/200-240 V are not fitted with optional RFI filter.*

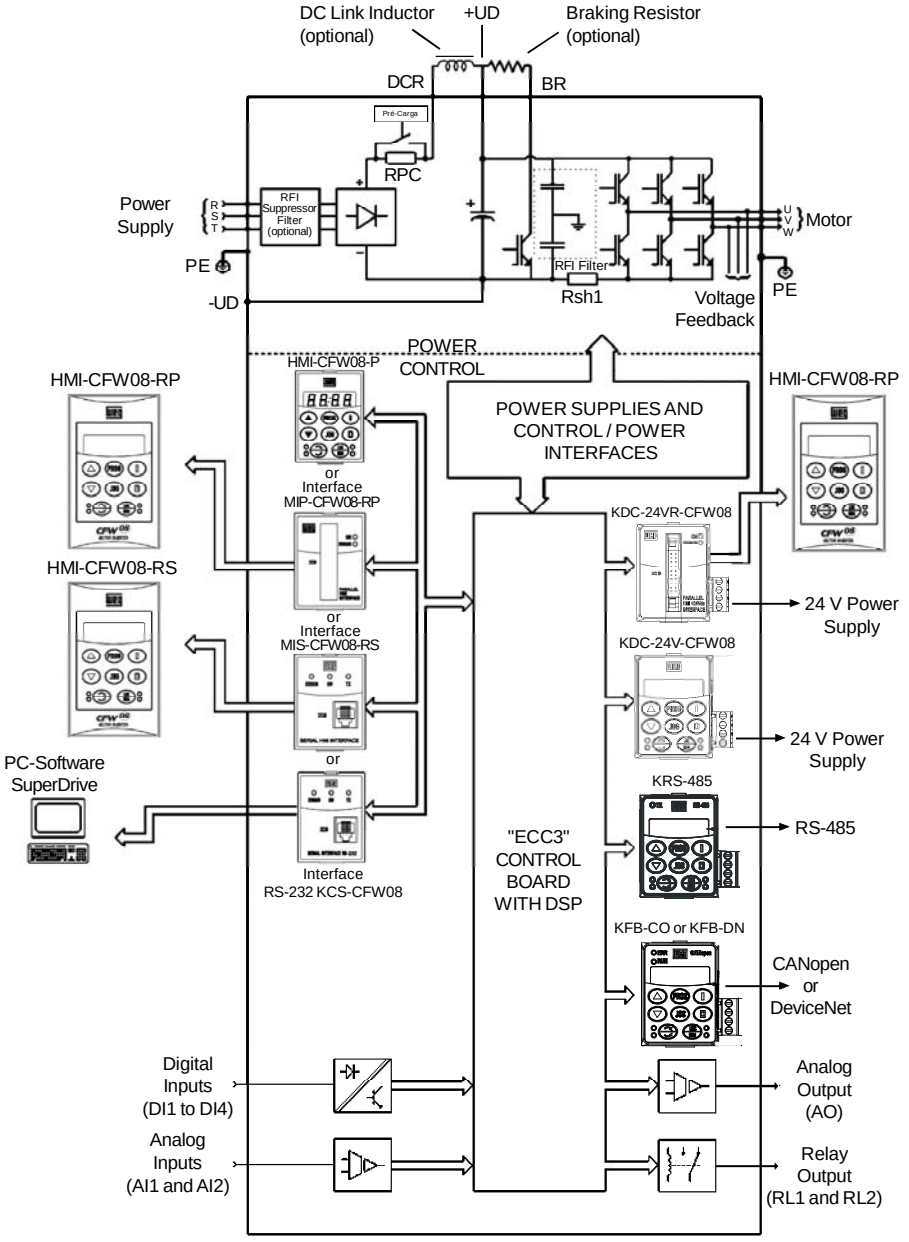

Figure 2.3 *- Block diagram for the models:*
28-33 A/200-240 V and 24-30 A/380-480 V
Note: *models 28 A and 33 A/200-240 V are not fitted with optional RFI filter.*

2.4 CFW-08 IDENTIFICATION

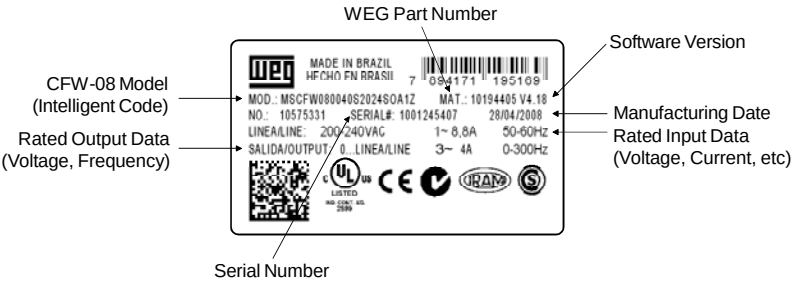

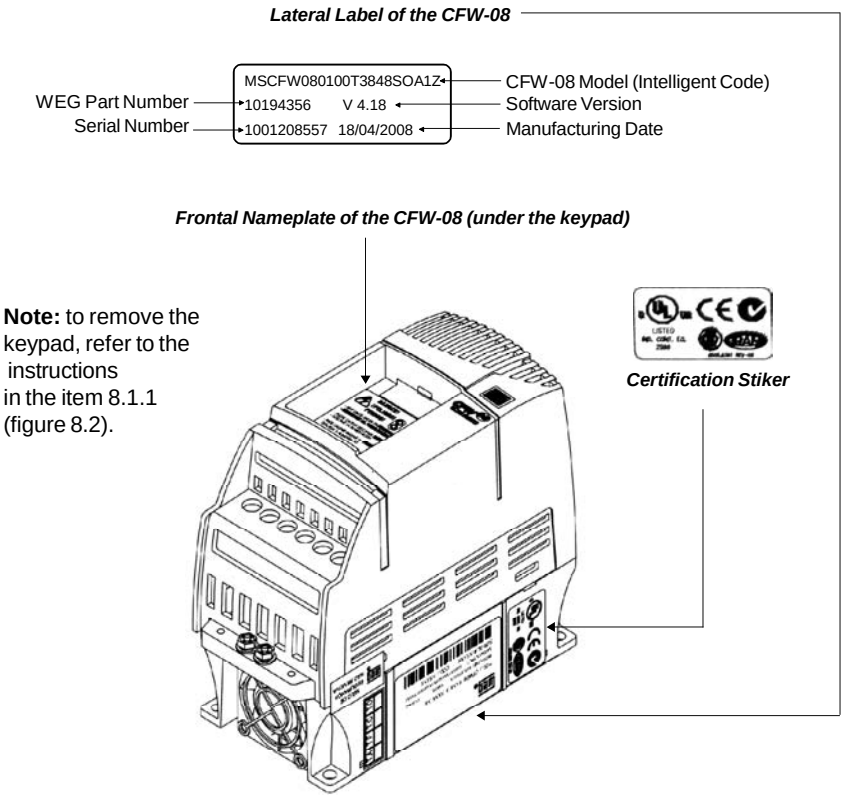

Figure 2.4 *- Description and location of the nameplates on the CFW-08*

HOW TO SPECIFY THE CFW-08 MODEL:

CFW-08	*0040*	*B*	*2024*	*E*	*O*	*_ _*	*_ _*	*_ _*	*_ _*	*_ _*	*_ _*	*Z*
WEG Series 08 Frequency Inverter	Rated Output Current for: **220 to 240 V:** 0016 = 1.6 A 0026 = 2.6 A 0040 = 4.0 A 0070 = 7.0 A 0073 = 7.3 A 0100 = 10 A 0160 = 16 A 0220 = 22 A 0280 = 28 A 0330 = 33 A **380 to 480 V:** 0010 = 1.0 A 0016 = 1.6 A 0026 = 2.6 A 0027 = 2.7 A 0040 = 4.0 A 0043 = 4.3 A 0065 = 6.5 A 0100 = 10 A 0130 = 13 A 0160 = 16 A 0240 = 24 A 0300 = 30 A	Number of phases of the power supply: S = single phase T = three phase B = single phase or three phase	Power Supply: 2024 = 200 to 240 V 3848 = 380 to 480 V 5060 (**) = 500-600 V	Manual Language: P = Portuguese E = English S = Spanish	Options: S = standard O = with options	Degree of Protection: Blank = standard N1 = Nema 1 N4 = Nema 4X (**)	Human Machine Interface: Blank = standard SI = without interface (with dummy panel)	Control Board: Blank = standard control A1 = control 1 (Plus Version) A2 = control 2 (Plus Version with AIs +/- 10 V) A3 = control 3 (Plus version with CANopen protocol)(*) A4 = control 4 (Plus version with DeviceNet protocol)(*) A5 = control 5 (**) (for Multipump application)	RFI Filter: Blank = standard FA = Category C2 RFI filter (internal or footprint)	Special Hardware: Blank = standard	Special Software: Blank = standard	End Code

(*) - The versions A3 and A4 of the control board shall be used only with the KFB-CO-CFW08 and with the KFB-DN-CFW08, respectively (refer to item 8.14 and 8.15). The parallel keypad, the serial remote keypad, the parallel remote keypad, and the serial protocol (Modbus and WEG) cannot be used with these versions of the control board.
(**) - For these models, contact WEG.

NOTES!

The option field (S or O) defines if the CFW-08 is a standard version or if it will be equipped with any optional devices. If the standard version is required, the specification code ends here.
The model number has always the letter Z at the end. For example:
CFW080040S2024ESZ = standard 4.0A CFW-08 inverter, single-phase at (200 to 240) V input, with manual in English.

If the CFW-08 is equipped with any optional devices, you must fill out all fields in the correct sequence up to the last optional device, the model number is completed with the letter Z.

Thus, for instance if the product above is required with Nema 1 degree of protection:
CFW080040S2024EON1Z = standard CFW-08 inverter, 4.0 A, single-phase, 200-240 V input, with manual in English language and with kit for Nema 1 degree of protection.

For the effect of this code, the standard product is conceived as follows:

- CFW-08 with standard control board.
- Degree of protection: Nema 1 for the models 22 A, 28 A and 33 A/ 200-400 V and also 13 A,16 A, 24 A and 30 A/380-480 V, IP20 for the other models.

☑ CFW-08 Plus - A1 is composed of the inverter and the control board 1. Example: CFW080040S2024PO<u>A1</u>Z.

☑ CFW-08 Plus - A2 is composed of the inverter and the control board 2. Example: CFW080040S2024PO<u>A2</u>Z. These models are factory set for bipolar analog inputs (-10 V to +10 V).
This configuration is lost when the factory default parameters are loaded (P204 = 5). Refer to the detailed description of parameters P204 and P235 for further information.

☑ CFW-08 Plus - A3 is composed of the inverter, the KFB-CO-CFW08 kit and the CANopen communication protocol. Example: CFW-080040S2024PO<u>A3</u>Z.

☑ CFW-08 Plus - A4 is composed of the inverter, the KFB-DN-CFW08 kit and the DeviceNet communication protocol. Example: CFW080040S2024PO<u>A4</u>Z.

☑ CFW-08 Multipump - A5 is composed of the inverter and the control board 5, used for multipump system applications.

☑ 7.0 A, 16.0 A, 22 A, 28 A and 33 A /200-240 V and for all 380-480 V models are just available with three-phase power supply.

☑ A Category C2 RFI filter (optional) can be installed inside the inverter in models 7.3 A and 10 A/200-240 V (single-phase) and 2.7 A, 4.3 A, 6.5 A, 10 A, 13 A, 16 A, 24 A and 30 A/380-480 V. Models 1.6 A, 2.6 A and 4.0 A/200-240 V (single-phase) and 1.0 A, 1.6 A, 2.6 A and 4.0 A/380-480 V can be provided mounted on a footprint Category C2 RFI filter (optional).

The listing of the existing models (voltage/current) is shown in item 9.1.

2.5 RECEIVING AND STORING

The CFW-08 is supplied in cardboard boxes.
The outside of the packing box has a nameplate that is identical to that on the CFW-08.
Please check if the CFW-08 is the one you ordered.
Check if the:

☑ CFW-08 nameplate data matches with your purchase order.
☑ The equipment has not been damaged during transport.

If any problem is detected, contact the carrier immediately.
If the CFW-08 is not installed immediately, store it in a clean and dry room (storage temperatures between -25 °C [-13 °F] and 60 °C [140 ºF]). Cover it to protect against dust, dirt or other contamination.

ATTENTION!
When the inverter is stored for a long time, it is recommended to power the inverter up for 1 hour every year. Make sure to use a power supply with the following characteristics for all models (200-240 V or 380-480 V): 220 V, single-phase or three-phase, 50 Hz or 60 Hz, without connecting the motor to the drive output. After powering up the drive, keep it off for 24 hours before using it again.

INSTALLATION AND CONNECTION

This chapter describes the procedures for the electrical and mechanical installation of the CFW-08. These guidelines and suggestions must be followed for proper CFW-08 operation.

3.1 MECHANICAL INSTALLATION

3.1.1 Environment

The location of the inverter installation is an important factor to assure good performance and long useful life for its components. For proper installation, we make the following recommendations:

- ☑ Avoid direct exposure to sunlight, rain, high moisture and sea air;
- ☑ Avoid exposure to explosive or corrosive gases and liquids;
- ☑ Avoid exposure to excessive vibration, dust, oil or any conductive particles in the air.

Environment conditions:

- ☑ Temperature: 0 ºC to 40 ºC (32 ºF to 104 ºF) - nominal conditions. From 40 ºC to 50 ºC (32 ºF to 122 ºF) - with 2 % current derating for each 1 ºC (1.8 ºF) degree above 40 ºC (104 ºF).
- ☑ Relative air humidity: 5 % to 90 % - non-condensing.
- ☑ Maximum altitude: 1000 m (3,300 ft) - nominal conditions. From 1000 m to 4000 m (3,300 to 13123.3 ft) - with 1 % current reduction for each 100 m (328 ft) above 1000 m (3,300 ft).
  From 2000 m (6561.6 ft) to 4000 m (13123.3 ft) - a voltage reduction of 1.1 % every 100 m (328 ft) above 2000 m (6561.6 ft).
- ☑ Pollution degree: 2 (according to EN50178 and UL508C)

3.1.2 CFW-08 Mounting Specifications

The figure 3.1 and the table 3.1, provides external mounting specifications, and external fixing holes of the CFW-08.

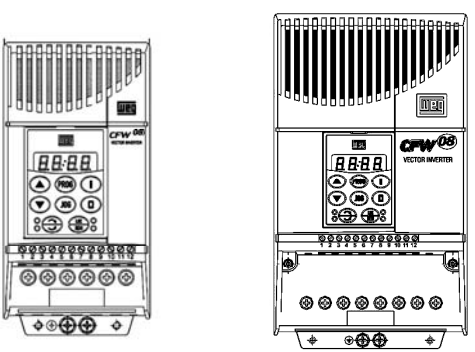

Figure 3.1 *- CFW-08 mounting specifications*

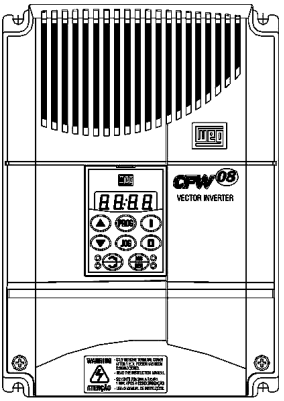

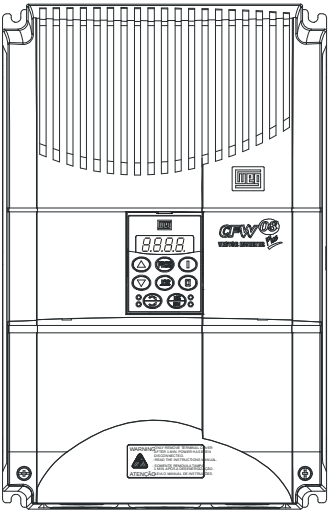

VIEW OF THE MOUNTING BASE

FRONTAL VIEW

LATERAL VIEW

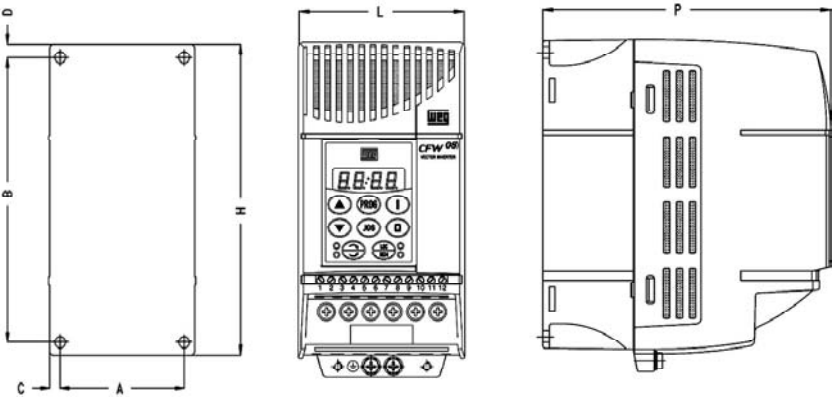

Figure 3.1 (cont.) *- CFW-08 mounting specifications*

Inverter Model	Dimensions			Fixing base				Mounting Screw	Weigth kg (lb)	Degree of Protection
	Width L mm (in)	Height H mm (in)	Depth P mm (in)	A mm (in)	B mm (in)	C mm (in)	D mm (in)			
1.6 A / 200-240 V	75 (2.95)	151 (5.95)	131 (5.16)	64 (2.52)	129 (5.08)	5 (0.20)	6 (0.24)	M4 (5/32)	1.0 (2.2)	IP20 / Nema 1 (*)
2.6 A / 200-240 V	75 (2.95)	151 (5.95)	131 (5.16)	64 (2.52)	129 (5.08)	5 (0.20)	6 (0.24)	M4 (5/32)	1.0 (2.2)	IP20 / Nema 1 (*)
4.0 A / 200-240 V	75 (2.95)	151 (5.95)	131 (5.16)	64 (2.52)	129 (5.08)	5 (0.20)	6 (0.24)	M4 (5/32)	1.0 (2.2)	IP20 / Nema 1 (*)
7.0 A / 200-240 V	75 (2.95)	151 (5.95)	131 (5.16)	64 (2.52)	129 (5.08)	5 (0.20)	6 (0.24)	M4 (5/32)	1.0 (2.2)	IP20 / Nema 1 (*)
7.3 A / 200-240 V	115 (4.53)	200 (7.87)	150 (5.91)	101 (3.98)	177 (6.97)	7 (0.28)	5 (0.20)	M4 (5/32)	2.0 (4.4)	IP20 / Nema 1 (*)
10 A / 200-240 V	115 (4.53)	200 (7.87)	150 (5.91)	101 (3.98)	177 (6.97)	7 (0.28)	5 (0.20)	M4 (5/32)	2.0 (4.4)	IP20 / Nema 1 (*)
16 A / 200-240 V	115 (4.53)	200 (7.87)	150 (5.91)	101 (3.98)	177 (6.97)	7 (0.28)	5 (0.20)	M4 (5/32)	2.0 (4.4)	IP20 / Nema 1 (*)
22 A/200-240 V	143 (5.63)	203 (7.99)	165 (6.50)	121 (4.76)	180 (7.08)	11 (0.43)	10 (0.39)	M5 (3/16)	2.5 (9.8)	IP20/Nema 1
28 A/200-240 V	182 (7.16)	290 (11.41)	196 (7.71)	161 (6.33)	260 (10.23)	11 (0.43)	10 (0.39)	M5 (3/16)	6 (2.36)	IP20/Nema 1
33 A/200-240 V	182 (7.16)	290 (11.41)	196 (7.71)	161 (6.33)	260 (10.23)	11 (0.43)	10 (0.39)	M5 (3/16)	6 (2.36)	IP20/Nema 1
1.0 A / 380-480 V	75 (2.95)	151 (5.95)	131 (5.16)	64 (2.52)	129 (5.08)	5 (0.20)	6 (0.24)	M4 (5/32)	1.0 (2.2)	IP20 / Nema 1 (*)
1.6 A / 380-480 V	75 (2.95)	151 (5.95)	131 (5.16)	64 (2.52)	129 (5.08)	5 (0.20)	6 (0.24)	M4 (5/32)	1.0 (2.2)	IP20 / Nema 1 (*)
2.6 A / 380-480 V	75 (2.95)	151 (5.95)	131 (5.16)	64 (2.52)	129 (5.08)	5 (0.20)	6 (0.24)	M4 (5/32)	1.0 (2.2)	IP20 / Nema 1 (*)
2.7 A / 380-480 V	115 (4.53)	200 (7.87)	150 (5.91)	101 (3.98)	177 (6.97)	7 (0.28)	5 (0.20)	M4 (5/32)	2.0 (4.4)	IP20 / Nema 1 (*)
4.0 A / 380-480 V	75 (2.95)	151 (5.95)	131 (5.16)	64 (2.52)	129 (5.08)	5 (0.20)	6 (0.24)	M4 (5/32)	1.0 (2.2)	IP20 / Nema 1 (*)
4.3 A / 380-480 V	115 (4.53)	200 (7.87)	150 (5.91)	101 (3.98)	177 (6.97)	7 (0.28)	5 (0.20)	M4 (5/32)	2.0 (4.4)	IP20 / Nema 1 (*)
6.5 A / 380-480 V	115 (4.53)	200 (7.87)	150 (5.91)	101 (3.98)	177 (6.97)	7 (0.28)	5 (0.20)	M4 (5/32)	2.0 (4.4)	IP20 / Nema 1 (*)
10 A / 380-480 V	115 (4.53)	200 (7.87)	150 (5.91)	101 (3.98)	177 (6.97)	7 (0.28)	5 (0.20)	M4 (5/32)	2.0 (4.4)	IP20 / Nema 1 (*)
13 A / 380-480 V	143 (5.63)	203 (7.99)	165 (6.50)	121 (4.76)	180 (7.09)	11 (0.43)	10 (0.39)	M5 (3/16)	2.5 (5.5)	IP20 / Nema 1
16 A / 380-480 V	143 (5.63)	203 (7.99)	165 (6.50)	121 (4.76)	180 (7.09)	11 (0.43)	10 (0.39)	M5 (3/16)	2.5 (5.5)	IP20 / Nema 1
24 A/380-480 V	182 (7.16)	290 (11.41)	196 (7.71)	161 (6.33)	260 (10.23)	11 (0.43)	10 (0.39)	M5 (3/16)	6 (2.36)	IP20 / Nema 1
30 A/380-480 V	182 (7.16)	290 (11.41)	196 (7.71)	161 (6.33)	260 (10.23)	11 (0.43)	10 (0.39)	M5 (3/16)	6 (2.36)	IP20 / Nema 1

(*) These models are Nema 1 only with the KN1-CFW08-MX optional.

Table 3.1 *- CFW-08 dimensions for mechanical installation of the several models*

3.1.3 Positioning and Fixing

When installing the CFW-08, free space around the inverter must be left as indicated in figure 3.2. Table 3.2 shows the required free spaces.

Install the inverter in vertical position according to the following recommendations:
1) Install the inverter on a flat surface.
2) Do not install heat sensitive components immediately above the inverter.

ATTENTION!
When inverters are installed side by side, maintain the minimum recommended distance B.
When inverters are installed top and bottom, maintain the minimum recommended distance A + C and deflect the hot air coming from the inverter below.

ATTENTION!
Provide independent conduits for signal, control and power conductors separation (refer to item 3.2 - Electrical Installation).

Use separate conduits or trunking for control and power wiring (see item 3.2 - Electrical Installation).

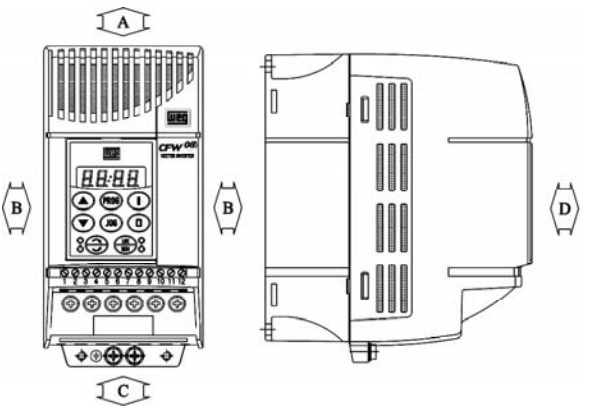

Figure 3.2 *- Free spaces for cooling*

CFW-08 Model	A		B		C		D	
1.6 A / 200-240 V	30 mm	1.18 in	5 mm	0.20 in	50 mm	2 in	50 mm	2 in
2.6 A / 200-240 V								
4.0 A / 200-240 V								
7.0 A / 200-240 V								
1.0 A / 380-480 V								
1.6 A / 380-480 V								
2.6 A / 380-480 V								
4.0 A / 380-480 V								
7.3 A / 200-240 V	35 mm	1.38 in	15 mm	0.59 in	50 mm	2 in	50 mm	2 in
10 A / 200-240 V								
16 A / 200-240 V								
2.7 A / 380-480 V								
4.3 A / 380-480 V								
6.5 A / 380-480 V								
10 A / 380-480 V								
22 A / 200-240 V	40 mm	1.57 in	30 mm	1.18 in	50 mm	2 in	50 mm	2 in
13 A / 380-480 V								
16 A / 380-480 V								
28 A/200-240 V	50 mm	2 in	40 mm	1.57 in	60 mm	2.36 in	50 mm	2 in
33 A/200-240 V								
24 A/380-480 V								
30 A/380-480 V								

Table 3.2 *- Recommended free spaces*

3.1.3.1 Panel Mounting

When inverters are installed inside closed metallic panels or boxes provide suitable air exhaustion by ensuring that the ambient temperature remains within the allowed range. For watt losses refer to item 9.1 of this manual.
For reference, table 3.3 shows the cooling airflow for each inverter model.

Inverter Cooling Method: internal fan, flow direction from the bottom to the top.

CFW-08 Inverter Model	CFM	l/s	m^3/min
4.0 A, 7.0 A/200 V 2.6 A, 4.0 A/400 V	6.0	2.8	0.17
7.3 A, 10 A, 16 A/200 V 6.5 A, 10 A/400 V	18.0	8.5	0.51
13 A, 16 A/400 V	18.0	8.5	0.51
22 A/200 V	22.0	10.4	0.62
28 A/200 V 24 A/400 V	36.0	17.0	1.02
33 A/200 V 30 A/400 V	44.0	20.8	1.25

Table 3.3 *- Cooling air flow requirements*

3.1.3.2 Surface Mounting

Figure 3.3 shows the surface installation procedures of the CFW-08.

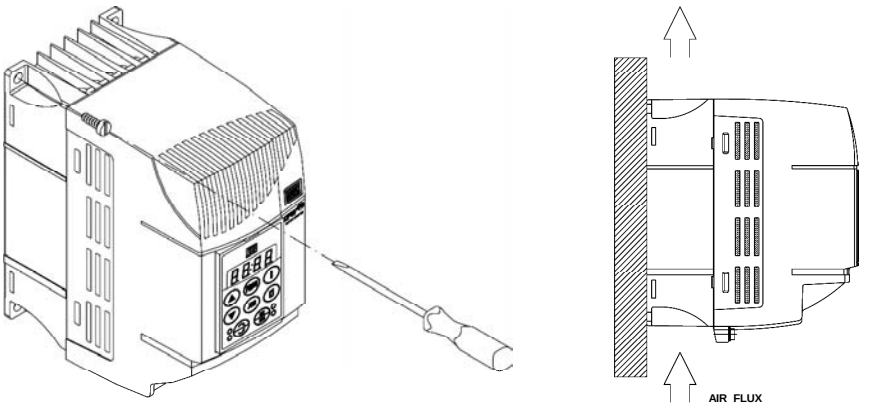

Figure 3.3 *- Mounting procedures for CFW-08*

3.2 ELECTRICAL INSTALLATION

DANGER!
The information below will be a guide to achieve a proper installation. Also follow all applicable local standards for electrical installations.

DANGER!
Be sure the AC input power has been disconnected before making any terminal connection.

DANGER!
Do not use the CFW-08 as an emergency stop device. For this purpose provide other additional mechanical means.

3.2.1 Power / Grounding Terminals

The power connection terminals can be of different sizes and configurations, depending on the inverter model, as shown in figure 3.4.

Description of the power terminals:

- ☑ L/L1, N/L2 and L3 (R, S ,T): AC power supply.
  The models of the line voltage 200-240 V (excepting 7.0 A, 16 A, 22 A, 28 A, and 33 A) can be operated on two phases (single-phase operation) without rated current reduction. In this case the AC power supply can be connected to any 2 terminals of the 3 inputs terminals.
- ☑ U, V, W: connection to the motor.

- ☑ -UD: negative pole of the DC link circuit is not available on the models 1.6 A-2.6 A-4.0 A-7.0 A/200-240 V and models 1.0 A-1.6 A-2.6 A-4.0 A/380-480 V. It is used when the inverter supplied by DC voltage (with the terminal +UD). In order to avoid an incorrect braking resistor connection (mounted outside the inverter), there is a protective rubber plug on this terminal, which must be removed if the –UD terminal has to be used.
- ☑ BR: Connection for the braking resistor.
  Not available on the models 1.6 A-2.6 A-4.0 A-7.0 A/200-240 V and on the models 1.0 A-1.6 A-2.6 A-4.0 A/380-480 V.
- ☑ +UD: positive pole of the DC link circuit, not available on the models 1.6 A-2.6 A-4.0 A-7.0 A/200-240 V and on the models 1.0 A-1.6 A-2.6 A-4.0 A/380-480 V. It is used to connect the braking resistor (with the BR terminal) or when the inverter shall be supplied by with DC voltage (jointly with the –UD terminal.
- ☑ DCR: Connection for the external DC link circuit inductor (optional). It is only available on the models 28 A and 33 A/ 200-240 V and on the models 24 A and 30 A/380-480 V.

a) 1.6-2.6-4.0-7.0 A/200-240 V and 1.0-1.6-2.6-4.0 A/380-480 V models

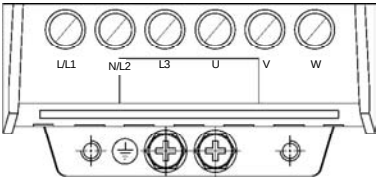

b) 7.3-10-16 A/200-240 V and 2.7-4.3-6.5-10 A/380-480 V models

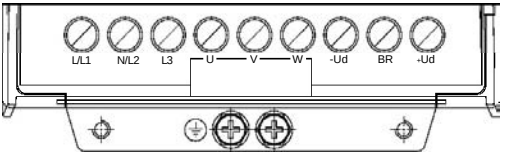

c) 22 A/200-240 V and 13-16 A/380-480 V models

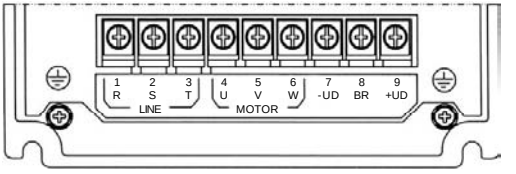

Figure 3.4 a) to c) *- Power terminals*

d) 28-33 A/200-240 V and 24-30 A/380-480 V models

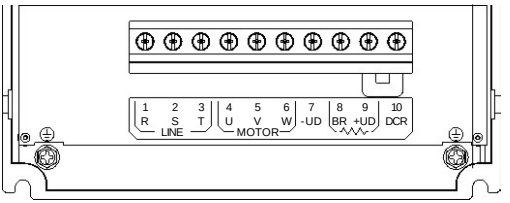

Figure 3.4 (cont.) d) *- Power terminals*

3.2.2 Location of the Power Terminals, Grounding Terminals and Control Terminal Connections

a) 1.6-2.6-4.0-7.0-7.3-10-16 A/200-240 V and 1.0-1.6-2.6-2.7-4.0-4.3-6.5-10 A/380-480 V models

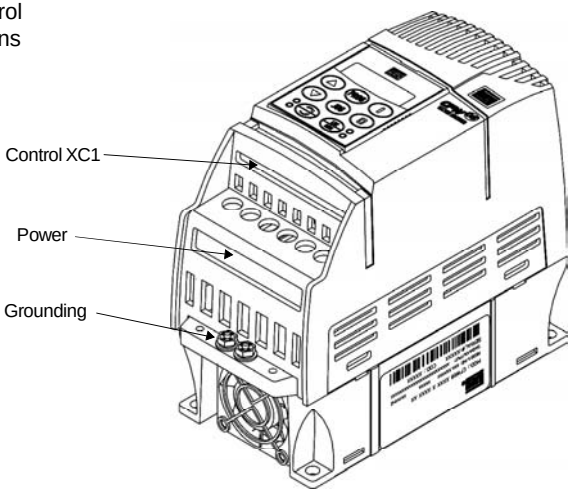

b) 22-28-33 A/200-240 V and 13-16-24-30 A/380-480 V models

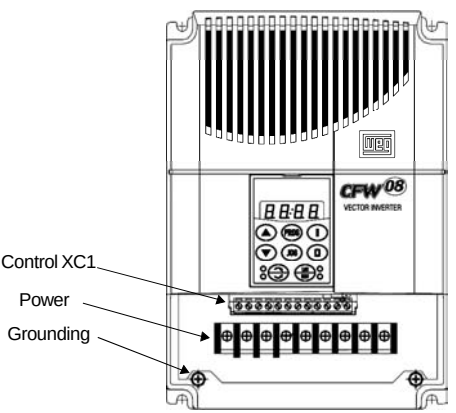

Figure 3.5 a) and b) *- Location of the power, grounding and control connections*

3.2.3 Power/Grounding Wiring and Circuit Breakers

ATTENTION!
Install the inverter and power cables distant from sensitive equipment and wirings by 0.25 m (0.82 ft), for instance PLCs, temperature controllers, thermocouple cables, etc.

Use the recommended wire cross section and circuit breakers as shown in table 3.4. Use only copper wire (70 ºC [158 ºF]).

Rated Inverter Current [A]	Power Cables [mm²]	Grounding Wiring [mm²]	Maximum Power Cable [mm²]	Maximum Grounding Wiring [mm²]	Circuit Breaker	
					Current	WEG Model
Single-phase (200-240 V models)						
1.6	1.5	2.5	4.0	4.0	5.5	MPW25-6,3
2.6	1.5	2.5	4.0	4.0	9.0	MPW25-10
4.0	1.5	2.5	4.0	4.0	13.5	MPW25-16
7.3	4.0	4.0	4.0	4.0	25.0	MPW25-25
10.0	4.0	4.0	4.0	4.0	32.0	MPW25-32
Three-phase (200-240 V and 380-480 V models)						
1.0	1.5	2.5	2.5	4.0	1.6	MPW25-1,6
1.6	1.5	2.5	2.5	4.0	2.5	MPW25-2,5
2.6	1.5	2.5	2.5	4.0	4.0	MPW25-4,0
2.7	1.5	2.5	4.0	4.0	4.0	MPW25-4,0
4.0	1.5	2.5	2.5	4.0	6.3	MPW25-6,3
4.3	1.5	2.5	4.0	4.0	6.3	MPW25-6,3
6.5	2.5	4.0	4.0	4.0	10.0	MPW25-10
7.0	2.5	4.0	4.0	4.0	12.0	MPW25-16
7.3	4.0	4.0	4.0	4.0	12.0	MPW25-16
10.0	4.0	4.0	4.0	4.0	16.0	MPW25-16
13.0	4.0	4.0	4.0	4.0	20.0	MPW25-20
16.0	4.0	4.0	4.0	4.0	25.0	MPW25-25
22.0	4.0	4.0	4.0	4.0	40.0	DW125H-40
24.0	4.0	4.0	10.0	6.0	40.0	DW125H-40
28.0	6.0	6.0	10.0	6.0	50.0	DW125H-50
30.0	6.0	6.0	10.0	6.0	50.0	DW125H-50
33.0	6.0	6.0	10.0	6.0	63.0	DW125H-63

Table 3.4 *- Recommended wiring and circuit breakers – use only copper wire (70 ºC [158 ºF])*

NOTE!
The wire sizing in table 3.4 shall be used as reference values only. The exact wire sizing depends on the installation conditions and the maximum acceptable line voltage drop.

The recommended tightening torque is shown in table 3.5.

ATTENTION!
The use of mini circuit breakers (MBU) is not recommended due to the level of the magnetic protection.

Model	Grounding Wiring		Power Cables		Type of Screwdriver for the Power Terminal
	N.m	Lbf.in	N.m	Lbf.in	
1.6 A / 200-240 V	0.5	4.34	1.0	8.68	Philips Number PH2
2.6 A / 200-240 V	0.5	4.34	1.0	8.68	Philips Number PH2
4.0 A / 200-240 V	0.5	4.34	1.0	8.68	Philips Number PH2
7.0 A / 200-240 V	0.5	4.34	1.0	8.68	Philips Number PH2
7.3 A / 200-240 V	0.5	4.34	1.76	15.62	Philips Number PH2
10.0 A / 200-240 V	0.5	4.34	1.76	15.62	Philips Number PH2
16.0 A / 200-240 V	0.5	4.34	1.76	15.62	Philips Number PH2
22.0 A / 200-240 V	0.5	4.34	1.76	15.62	Philips Number PH2
28.0 A / 200-240 V	0.5	4.34	1.76	15.62	Pozidriv Number PZ2
33.0 A / 200-240 V	0.5	4.34	1.76	15.62	Pozidriv Number PZ2
1.0 A / 380-480 V	0.5	4.34	1.2	10.0	Philips Number PH2
1.6 A / 380-480 V	0.5	4.34	1.2	10.0	Philips Number PH2
2.6 A / 380-480 V	0.5	4.34	1.2	10.0	Philips Number PH2
2.7 A / 380-480 V	0.5	4.34	1.76	15.62	Philips Number PH2
4.0 A / 380-480 V	0.5	4.34	1.2	10.0	Philips Number PH2
4.3 A / 380-480 V	0.5	4.34	1.76	15.62	Philips Number PH2
6.5 A / 380-480 V	0.5	4.34	1.76	15.62	Philips Number PH2
10.0 A / 380-480 V	0.5	4.34	1.76	15.62	Philips Number PH2
13.0 A / 380-480 V	0.5	4.34	1.76	15.62	Philips Number PH2
16.0 A / 380-480 V	0.5	4.34	1.76	15.62	Philips Number PH2
24.0 A / 380-480 V	0.5	4.34	1.76	15.62	Pozidriv Number PZ2
30.0 A / 380-480 V	0.5	4.34	1.76	15.62	Pozidriv Number PZ2

Table 3.5 *- Recommended tightening torque for power and grounding connections*

3.2.4 Power Connections

a) 1.6-2.6-4.0-7.0 A/200-240 V and 1.0-1.6-2.6-4.0 A/380-480 V models - Three phase power supply

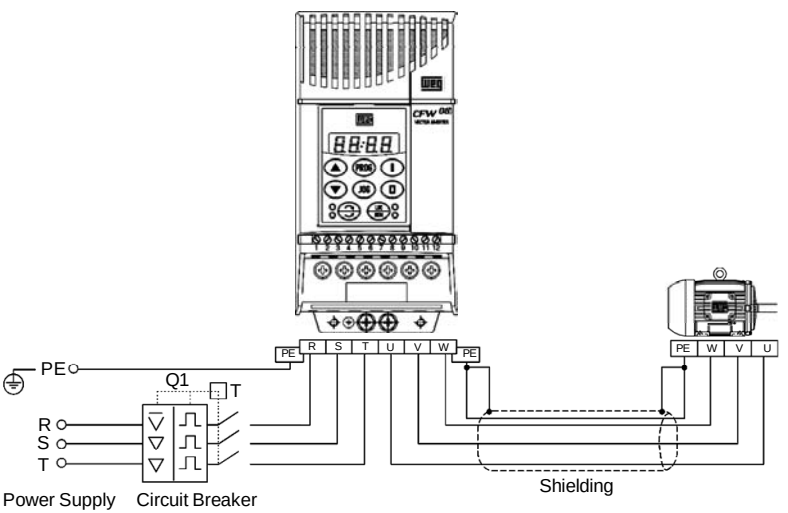

Figure 3.6 a) *- Power and grounding connections*

b) 7.3-10-16-22 A/200-240 V and 2.7-4.3-6.5-10-13-16 A/380-480 V models - Three phase power supply

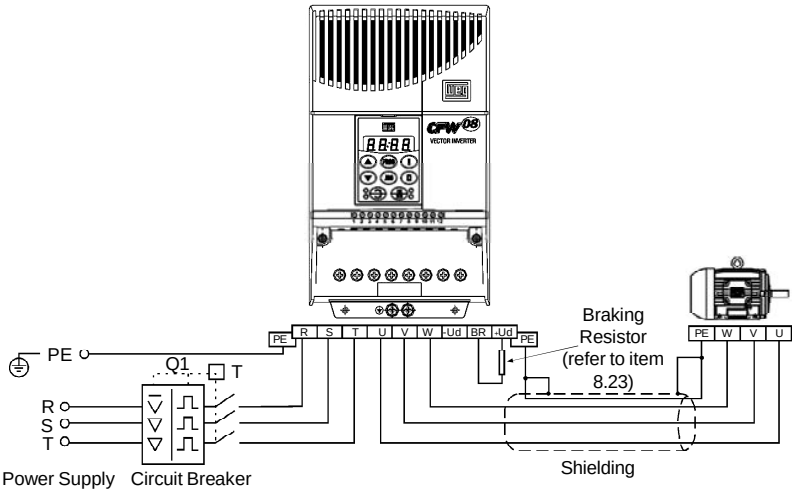

c) 1.6-2.6-4.0-7.3-10 A / 200-240 V models - Single phase power supply

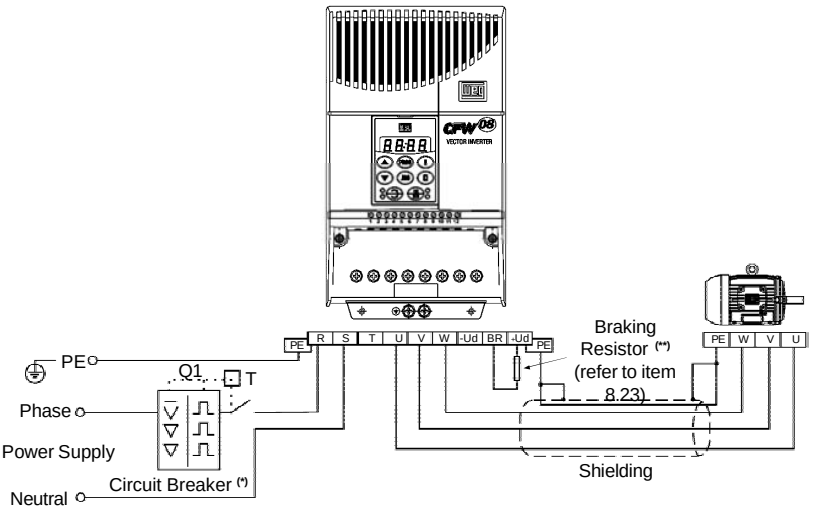

(*) In case of single-phase power supply with phase and neutral cable, connect only the phase cable to the circuit breaker.

(**) In the 1.6 A -2.6 A and 4.0 A models, the terminals to connect the braking resistor are not available.

Figure 3.6 b) and c) *- Power and grounding connections*

d) 28-33 A / 200-240 V and 24-30 A / 380-480 V models - Three phase power supply

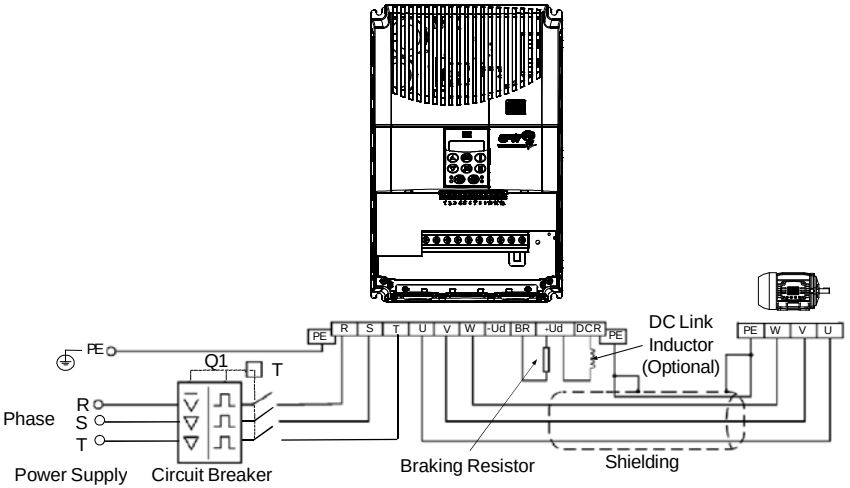

Figure 3.6 d) *- Power and grounding connections*

3.2.4.1 AC Input Connection

DANGER!
Provide an AC disconnecting switch to switch OFF the input power to the inverter. This device shall disconnect the inverter from the AC input supply when required (e. g. during maintenance services).

ATTENTION!
A contactor or another device that frequently disconnects and reapplies the AC supply to the inverter in order to start and stop the motor may cause damage to the inverter power section. The drive is designed to use control input signals for starting and stopping the motor. If used, the input device must not exceed one operation every 6 minutes otherwise the inverter may be damaged.

ATTENTION!
The AC input for the inverter must have a grounded neutral conductor.

NOTE!
The AC input must be compatible with the inverter rated voltage

Power supply line capacity:

- ☑ 30 kA rms symmetrical amperes, 200-480 Vac maximum, when protected by fuses rated maximum of 200 % device input current. Voltage is the same as the device maximum input voltage. In order to comply with the UL standard, UL recognized fuses must be used.

☑ If the CFW-08 is installed in networks which can supply more than 30.000 Arms, you must provide suitable protection circuits such as fuses and circuit breakers.

DC link inductor / line reactors
The requirements for use of line reactors or DC link inductor depend on several application factors. Refer to item 8.21.

NOTE!
Capacitors for power factor correction are not required at the input (L/L1, N/L2, L3 or R, S, T) and they must not be connected at the output (U, V, W).

3.2.4.2 Output Connections

The inverter is provided with electronic protection against motor overload. This protection must be set according to the specific motor. When the same inverter drives several motors, use individual overload relays for each motor. Maintain the electrical continuity of the motor cable shield.

ATTENTION!
If a disconnect switch or a contactor is inserted in the motor supply line, do not operate them with motor running or when inverter is enabled. Maintain the electrical continuity of the motor cable shield.

Dynamic braking (DB)
When inverters with dynamic braking (DB) are used, the DB resistor shall be mounted externally. Figure 8.31 shows how to connect the braking resistor. Size it according to the application, not exceeding the maximum current of the braking circuit. For the connection between inverter and the braking resistor, use twisted cable. Provide physical separation between this cable and the signal and control cables. When the DB resistor is mounted inside the panel, consider watt loss generated when defining the panel ventilation.

3.2.4.3 Grounding Connections

DANGER!
The inverter must be grounded to a protective earth (PE) for safety purposes.
The earth or ground connection must comply with the local regulations. For grounding, use cables with cross sections as indicated in table 3.4. Make the ground connection to a grounding bar or to the general grounding point (resistance ≤ 10 ohms).

DANGER!
Do not share the ground wiring with other equipment that operates with high currents (for instance: high voltage motors, welding machines, etc). If several inverters are used together, refer to figure 3.7.

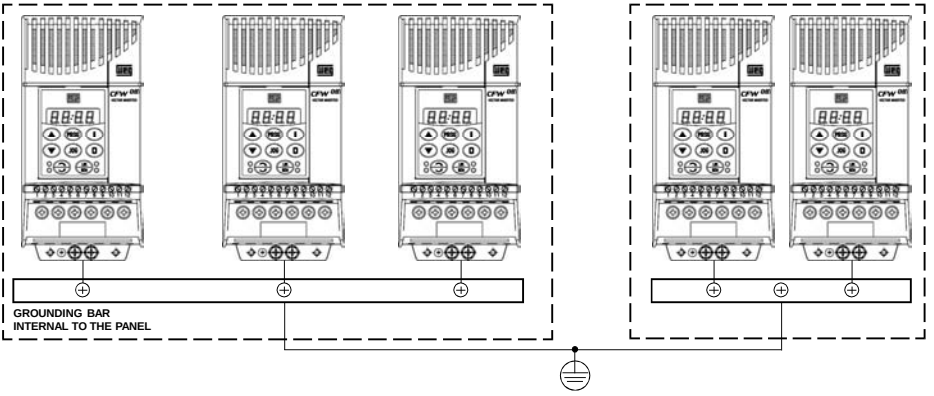

Figure 3.7 *- Grounding connections for more than one inverter*

ATTENTION!
The AC input for the inverter must have a grounded neutral conductor.

EMI – Electromagnetic interference
When electromagnetic interference (EMI) generated by the inverter interferes in the performance of other equipment, use shielded wires, or install the motor wires in metallic conduits. Connect one end of the shielding to the inverter grounding point and the other end to the motor frame.

Motor frame
Always ground the motor frame. Ground the motor in the panel where the inverter is installed or ground it to the inverter. The inverter output wiring must be laid separately from the input wiring as well as from the control and signal cables.

NOTE!
Do not use neutral conductor for grounding purposes.

3.2.5 Signal and Control Connections

The signal connections (analog inputs/outputs) and control connections (digital inputs and relay outputs) are made on the XC1 connector of control board (refer to the location in figure 3.5, item 3.2.2).
There are two configurations for the control board: standard version (CFW-08 line) and Plus version (CFW-08 Plus line), as shown below:

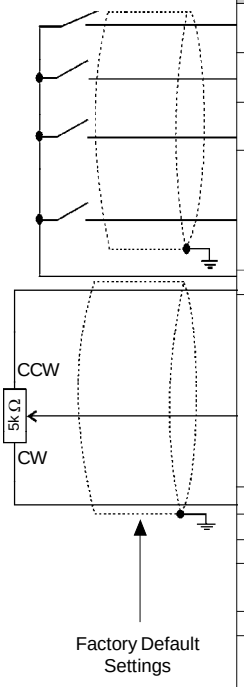

XC1 Terminal		Description Factory Default Function	Specifications
1	DI1	Digital Input 1 General Enable	4 isolates digital inputs - Logic NPN Minimum high level: 10 Vdc Maximum high level: 30 Vdc Maximum low level: 3 Vdc - Logic PNP Maximum low level: 10 Vdc Minimum high level: 21.5 Vdc Maximum high level: 30 Vdc Input current: -11 mA Maximum input current: -20 mA
2	DI2	Digital Input 2 FWD / REV	
3	DI3	Digital Input 3 Reset	
4	DI4	Digital Input 4 Start/Stop	
5	GND	0 V Reference	Not connected to PE
6	AI1 or DI5 or PTC1	Analog Input 1 or Digital Input 5 or PTC Input Frequency / Speed Reference (remote mode)	(0 to10) Vdc (0 to 20) mA (4 to 20) mA (figure 3.10) Impedance: 100 kΩ (voltage input) and 500 Ω (current input). - Linearity error < 0,25 % - Maximum voltage input: 30 Vdc For further information refer to P235 detailed parameter description
7	+10 V	Potentiometer Reference	+10 Vdc, ± 5 %, capacity: 2 mA
8	GND	0 V Reference	
9		Not Used	
10	N.C.	Relay Output 1 - N.C. Contact No Fault (P277 = 7)	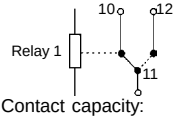 Contact capacity: 0.5 A / 250 Vac
11	Commom	Relay 1 Common Point	
12	N.O.	Relay 1 - N.O. Contact No Fault (P277 = 7)	

Note: NC = Normally Closed Contact, NO = Normally Open Contact.

Figure 3.8 *- XC1 control terminal description (standard control board - CFW-08)*

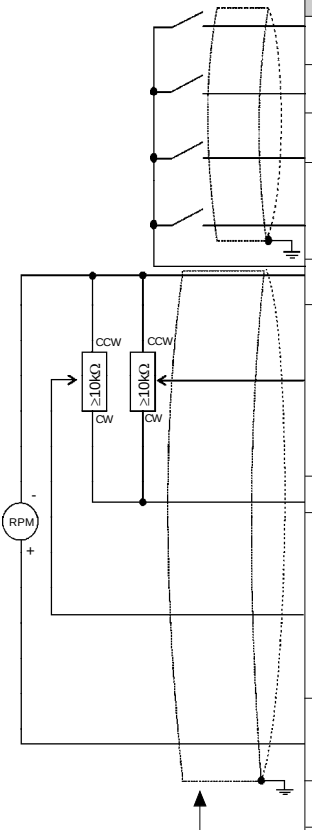

Factory Default Settings

Connector XC1		Description Factory Default Function	Specifications
1	DI1	Digital Input 1 No Function or General Enable	4 isolates digital inputs - Logic NPN Minimum high level: 10 Vdc Maximum high level: 30 Vdc Maximum low level: 3 Vdc - Logic PNP Maximum low level: 10 Vdc Minimum high level: 21.5 Vdc Maximum high level: 30 Vdc Input current: -11 mA Maximum input current: -20 mA
2	DI2	Digital Input 2 FWD / REV	
3	DI3	Digital Input 3 Reset	
4	DI4	Digital Input 4 No Function or Start/Stop	
5	GND	0 V Reference	Not connected to PE
6	AI1 or DI5 or PTC1	Analog Input1 or Digital Input 5 or PTC1 Input Frequency/Speed Reference (remote mode)	(0 to10) Vdc or (0 to 20) mA or (4 to 20) mA and (-10 to +10) Vdc(*)(figure 3.10) Impedance: 100 kΩ (voltage input) and 500Ω (current input) - Linearity error < 0,25 % - Maximum voltage input: 30 Vdc For further information refer to P235 detailed parameter description
7	+10 V	Potentiometer Reference	+10 Vdc, ± 5 %, capacity: 2 mA
8	AI2 or DI6 or PTC2	Analog Input 2 or Digital Input Digital 6 or PTC2 Input Not Used	(0 to10) Vdc or (0 to 20) mA or (4 to 20) mA and (-10 to +10) Vdc(*) (figure 3.10) Impedance: 100 kΩ (voltage input) and 500 Ω (current input) - Linearity error < 0.25 % - Maximum voltage input: 30 Vdc For further information refer to P239 detailed parameter description
9	AO	Analog Output Output Frequency (Fs)	(0 to 10) Vdc or (0 to 20) mA or (4 to 20) mA, RL ≥ 10k Ω Resolution: 8 bits Linearity Error < 0.25 %
10	N.C	Relay 2 - N.C. Contact Fs>Fx (P279 = 0)	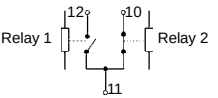 Contact capacity: 0.5 A / 250 Vac
11	Commom	Relays Common Points	
12	N.O.	Relay 1 - N.O. Contact No Fault (P277 = 7)	

Note: NC = Normally Closed Contact, NO = Normally Open Contact.

(*) This option is available only for version A2 of the control board (refer to item 2.4). In version A2 the linearity error is smaller than 0.50 %.

Figure 3.9 *- Description of the XC1 connector for the control board A1 (CFW-08 Plus), control board A2 (CFW-08 Plus with AIs -10 V a +10 V), control board A3 (CFW-08 Plus with CANopen protocol) and control board A4 (CFW-08 Plus with DeviceNet protocol)*

Refer to item 2.4 for additional information on the control boards.

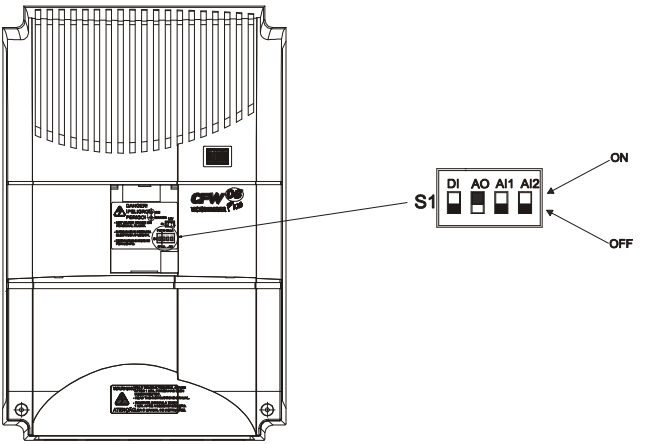

Figure 3.10 *- Jumpers position for selecting the analog inputs and outputs operation mode (voltage - 0 to 10 Vdc or current - 0 to 20 mA / 4 to 20 mA) as well as the digital inputs operation mode (high logic level - PNP or low logic level - NPN). Refer to the digital inputs definition on items 3.2.5.1 and 3.2.5.2*

As a default, the analog inputs and outputs are set to voltage mode (0 to 10) Vdc and the digital inputs are set to active (NPN logic). Change it by using DIP switch S1 (refer to figure 3.10) on the control board and by setting parameters P235, P239 and P253 (refer to table 3.6).

I/O	Factory Default Setting	DIP Switch	Selection
DI1 to DI4	Refer to the parameters P263, P264, P265 and P266	S1:1	OFF: digital inputs as low active (NPN) ON: digital inputs as high active (PNP)
AO	Output Frequency	S1:2	ON: (0 to 10) Vdc OFF: (4 to 20) mA or (0 to 20) mA
AI1	Frequency / Speed Reference (remote mode)	S1:3	OFF: (0 to 10) Vdc or DI5 ON: (4 to 20) mA or (0 to 20) mA or PTC
AI2	No Function	S1:4	OFF: (0 to 10) Vdc or DI6 ON: (4 to 20) mA or (0 to 20) mA or PTC

Table 3.6 *- Dip switch configuration (inputs and outputs)*

NOTE!

- ☑ If it's used a (4 to 20) mA signal, set parameter P235, P239 and P253 that defines the signal type at AI1, AI2 and AO respectively.
- ☑ The parameters related to the analog inputs are: P221, P222, P234, P235, P236, P238, P239, P240, P251, P252, P253. For more details, please refer to chapter 6.

During the signal and control wire installation note the following:

1) Cable cross section: (0.5 to 1.5) mm²/(20 to 14) AWG

2) Maximum Torque: 0.50 N.m (4.50 lbf.in).

3) XC1 wiring must be connected with shielded cables and installed at least 10 cm (3.9 in) minimum separately from other wiring (power, control at 110/220 V, etc) for lengths up to 100 m (330 ft) and 25 cm (9.8 in) minimum for total lengths over 100 m (330 ft). If the crossing of these cables is unavoidable, install them perpendicular, maintaining a mimimum separation distance of 5 cm (2 in) at the crossing point.

Connect the shield as shown below:

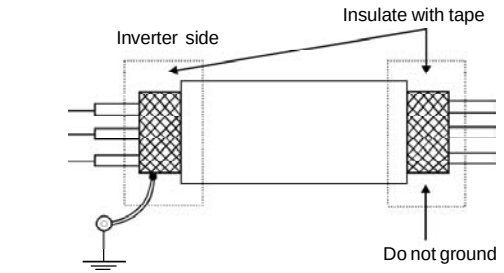

Figure 3.11 *- Shield connection*

4) For wiring distances longer than 50 m (150 ft), it is necessary to use galvanic isolators for the XC1:5 to 9 signals.

5) Relays, contactors, solenoids or eletromagnetic braking coils installed near the inverters can generate interferences in the control circuit. To eliminate this interference, connect RC suppressor in parallel with the coils of AC relays. Connect free-wheeling diode in case of DC relays.

6) When external keypad (HMI) is used (refer to chapter 8), separete the cable that connects the keypad to the inverter from other cables, maintaining a minimum distance of 10 cm (3.9 in) between them.

7) When analog reference (AI1 or AI2) is used and the frequency oscillates (problem caused by eletromagnetic interference) connect XC1:5 to the inverter heatsink.

3.2.5.1 Digital Inputs as Low Level Active (S1:1 to OFF)

This option can be selected when a PLC is used with relay or transistor output is used (low logic level to activate the DI).

a) Example using a PLC - relay output

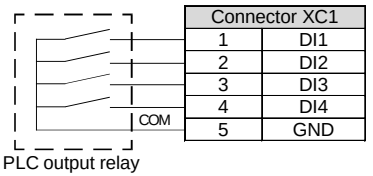

Connector XC1	
1	DI1
2	DI2
3	DI3
4	DI4
5	GND

b) Example using a PLC - NPN transistor output

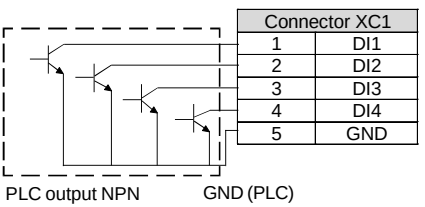

Connector XC1	
1	DI1
2	DI2
3	DI3
4	DI4
5	GND

Figure 3.12 a) and b) - *Digital inputs as low logic level configuration*

In these options, the equivalent circuit at inverter side is presented in the figure 3.13.

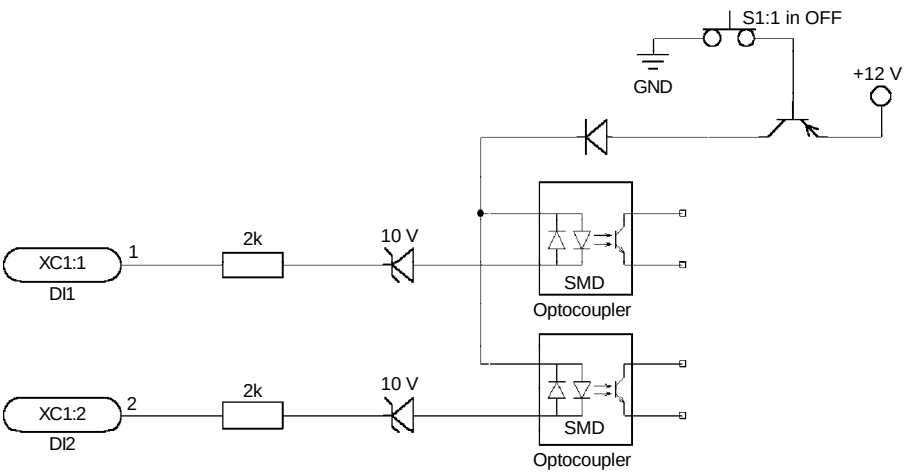

Figure 3.13 *- Equivalent circuit – Digital inputs as low logic level*

3.2.5.2 Digital Input as High Level Active (S1:1 to ON)

This option can be selected when a PLC is used with PNP transistor output (high logic level to activate the DI) or PLC with relay output is used. For this last alternative you must apply an external power supply 24 V +/- 10 %.

a) Example using a PLC - relay output

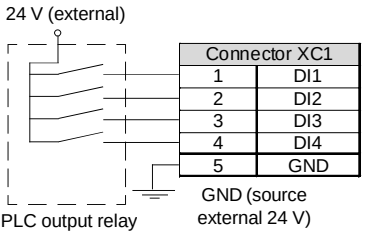

b) Example using a PLC - PNP transistor output

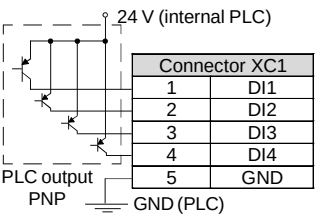

***Figure 3.14 a) and b**) - Configuration of the active digital inputs as high logic level*

In this option, the equivalent circuit at the inverter side is presented in the figure 3.15.

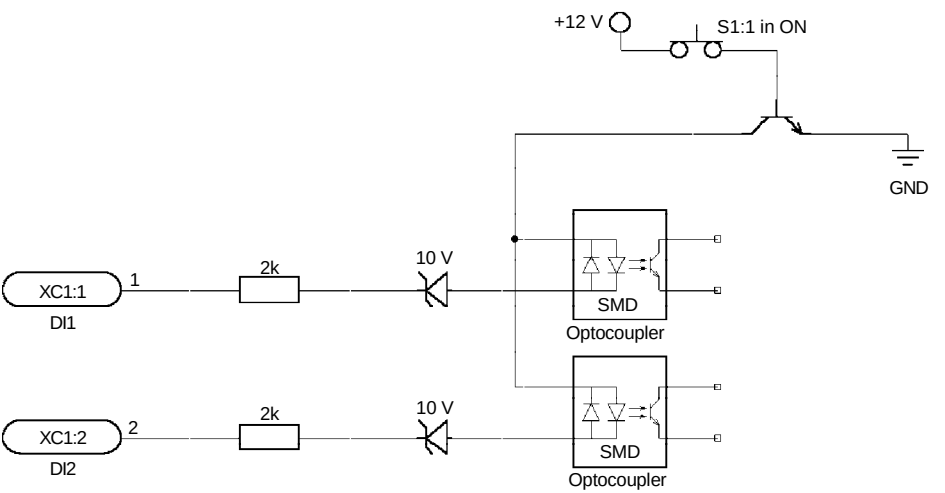

***Figure 3.15** - Equivalent circuit - Digital inputs as high logic level*

NOTES!

- ☑ The inverter is factory default programmed with the digital inputs as low level active (S1:1 in OFF). When the digital inputs are used as high level active, you must set the jumper S1:1 to ON.
- ☑ The jumper S1:1 selects the high level or low level active for all 4 digital inputs. You can not select them separately.

3.2.6 Typical Terminal Connections

Connection 1 - Keypad Start/Stop (local mode)

With the factory default programming, you can operate the inverter in local mode with the minimum connections shown in figure 3.6 (Power) and without control connections. This operation mode is recommended for users who are operating the inverter for the first time. Note that there is no need of connection of control terminals.
For start-up according to this operation mode, refer to chapter 5.

Connection 2 - Wire Start/Stop (remote mode)

Valid for factory default programming and inverter operating in remote mode. For the factory default programming, the selection of the operation mode (local/remote) is made via the key (default is local).
The figure 3.16 shows the inverter terminal connection for this type of driving.

S1: FWD/REV

S2: Reset

S3: Start/Stop

R1: Potentiometer for speed setting

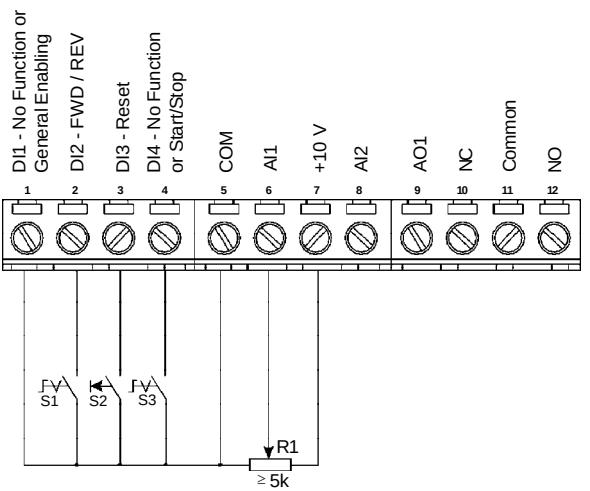

Figure 3.16 *- XC1 wiring for connection 2*

NOTES!

- ☑ For the proper operation of configuration 2, terminal 5 shall be connected to terminal 1 (general enable).
- ☑ The frequency reference can be sent via AI1 analog input (as shown in figure 3.16), via keypad HMI-CFW08-P, or via any other source (as described in the parameters P221 and P222).
- ☑ When a line fault occurs by using this type of connection with switch S3 at position "RUN", the motor will be enabled automatically as soon as the line is re-established.

Connection 3 - Wire ON/OFF

Function enabling (three wire control):
Set DI1 to ON: P263 = 14
Set DI2 to OFF: P264 = 14
Set P229 = 1 (command via terminals) if you want the 3-wire control in local mode.
Set P230 = 1 (command via terminals) if you want the 3-wire control in remote mode.
The figure 3.17 below shows the connections at VFD terminals for this type of configuration.

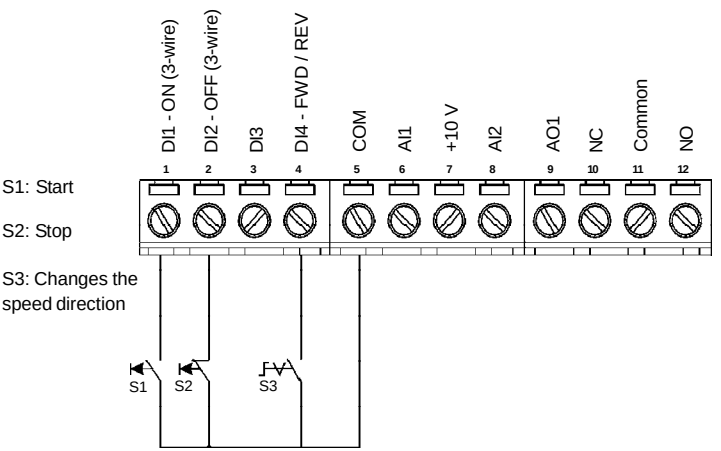

Figure 3.17 *- XC1 wiring for connection 3*

NOTES!

- ☑ S1 and S2 are push buttons, start (NO contact) and stop (NC contact), respectively.
- ☑ The speed reference can be via analog input AI1 (as in Connection 2), via keypad (HMI-CFW08-P), or via any other source (as described in the parameters P221 and P222).
- ☑ When a line fault occurs by using this connection with the motor running and the S1 and S2 switches are in original position (S1 openned and S2 closed), at the moment the voltage returns the inverter will not be enabled automatically, it will only be enabled if the S1 switch were closed again (a pulse at the Start digital input).
- ☑ The Start/Stop function is described in chapter 6.

Connection 4 - FWD/REV Function

Parameter to be programmed:
Set DI1 to Forward Run : P263 = 8
Set DI2 to Reverse Run: P264 = 8
Make sure the inverter commands are via terminals, i.e., P229 = 1 to local mode or P230 = 1 to remote mode.
The figure 3.18 below shows the inverter terminal connection for this type of driving.

S1 open: Stop
S1 closed: Forward Run

S2 open: Stop
S2 closed: Reverse Run

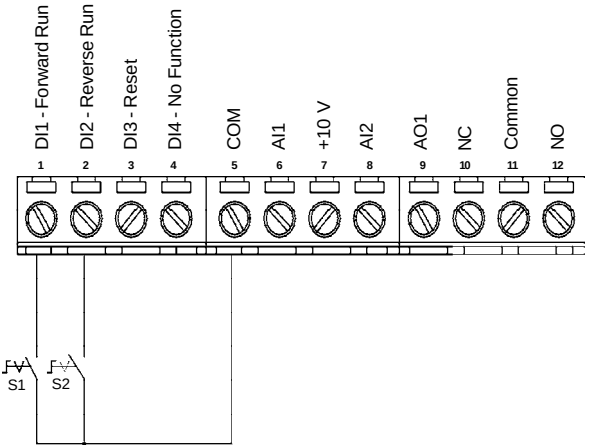

Figure 3.18 *- XC1 wiring for connection 4*

NOTE!

- ☑ For the correct operation of the connection 4, P266 must be programmed as “Not Used”.
- ☑ The speed reference can be via analog input AI1 (as in connection 2), via keypad (HMI-CFW08-P), or via any other source (refer to the description of parameters P221 and P222).
- ☑ When a line fault occurs, this connection with switch S1 or switch S2 is closed, the motor will be enabled automatically as soon as the line is re-established.

3.3 EUROPEAN EMC DIRECTIVE - REQUIREMENTS FOR CONFORMING INSTALLATIONS

The CFW-08 inverter series was designed considering safety and EMC (Electromagnetic Compatibility) aspects.
The CFW-08 units do not have an intrinsic function until connected with other components (e. g. a motor). Therefore, the basic product is not CE marked for compliance with the EMC Directive. The end user takes personal responsibility for the EMC compliance of the whole installation. However, when installed according to the recommendations described in the manual of the product and including the recommended filters and EMC measures the CFW-08 fulfill all requirements of the EMC Directive (89/336/EEC) as defined by the **EMC Product Standard for Adjustable Speed Electrical Power Drive Systems EN61800-3.**
Compliance of the CFW-08 series is based on the testing of the representative models. A Technical Construction File was checked and approved by a Competent Body.

3.3.1 Installation

The figure 3.19 shows the EMC filters connection.

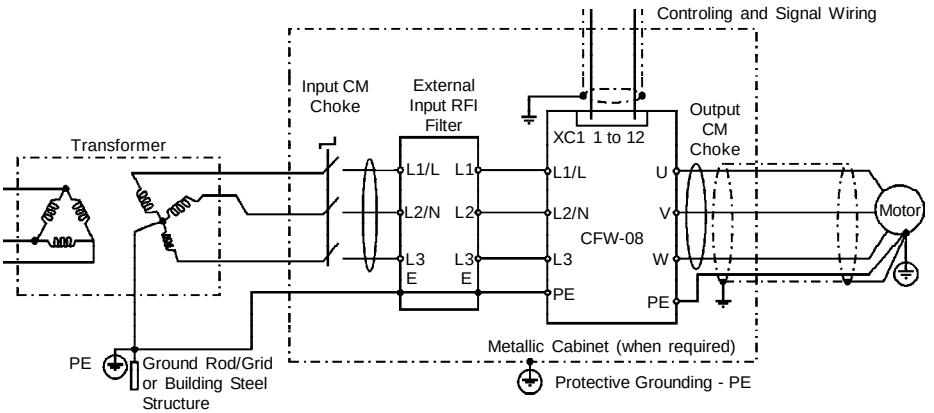

Obs.: Single-phase input inverters use single-phase filters and only L1/L and L2/N are used.

Figure 3.19 *- EMC filters connection - general condition*

The following items are required in order to have a conforming installation:

1) The motor cable must be armored, flexible armored or installed inside a metallic conduit or trunking with equivalent attenuation. Ground the screen/metallic conduit at both ends (inverter and motor).
2) Control and signal wiring must be shielded or installed inside a metallic conduit or trunking with equivalent attenuation.
3) The inverter and the external filter must be mounted on a common metallic back plate in close proximity to one another. Ensure that a good electrical connection is made between the heatsink (inverter), the frame (external filter) and the back plate.

4) The length of the wiring between filter and inverter must be kept as short as possible.
5) The cables shielding (motor and control) must be solidly connected to the common back plate, using a metal bracket.
6) Grounding as recommended in this manual.
7) Use short earthing cable to earth the external filter or inverter. When an external filter is used, only use an earth cable at filter input - the inverter earth connection is done by the metallic back plate.
8) Earth the back plate using a braid, as short as possible. Flat conductors (e.g. braids or brackets) have lower impedance at high frequencies.
9) Use cable glands whenever possible.

3.3.2 Emission and Immunity Levels Description

EMC Phenomenon	Basic Standard for Test Method	Level
Emission:		
Conducted Emission (Mains Terminal Disturbance Voltage - Frequency Band 150 kHz to 30 MHz)	IEC/EN61800-3	"First environment" (1) unrestricted distribution (3) Category C1, or; "First environment" (1) restricted distribution (4) (5) Category C2, or; "Second environment" (2) unrestricted distribution (3) (6) Category C3
Radiated Emission (Electromagnetic Radiation Disturbance - Frequency Band 30 MHz to 1000 MHz)		"First environment" (1), restricted distribution (4) (5) "Second environment" (2), unrestricted distribution (3)
Immunity:		
Electrostatic Discharge (ESD)	IEC 61000-4-2	6 kV contact discharge
Fast Transient-burst	IEC 61000-4-4	4 kV/2.5 kHz (capacitive clamp) input cable 2 kV/5 kHz control cables; 2 kV/5 kHz (capacitive clamp) motor cable; 1 kV/5 kHz (capacitive clamp) external keypad cable
Conducted Radio-frequency Common Mode	IEC 61000-4-6	0.15 to 80 MHz; 10 V; 80 % AM (1 kHz) - motor, control and remote keypad cable 1.2/50 µs, 8/20 µs
Surge	IEC 61000-4-5	1 kV coupling line to line 2 kV coupling line to earth
Radio-frequency Electromagnetic Field	IEC 61000-4-3	80 to 1000 MHz; 10 V/m; 80 % AM (1 kHz)

Table 3.7 *- Specification of the emission and immunity levels*

Notes:

(1) First environment: includes domestic premises. It also includes establishments directly connected without intermediate transformers to a low-voltage power supply network which supplies buildings used for domestic purposes.

(2) Second environment: includes all establishments other than those directly connected to a low-voltage power supply network which supplies buildings used for domestic purposes.

(3) Unrestricted distribution: mode of sales distribution in which the supply of equipment is not dependent on the EMC competence of the customer or user for the application of drives.

(4) Restricted distribution: mode of sales distribution in which the manufacturer restricts the supply of equipment to suppliers, customers or users who separately or jointly have technical competence in the EMC requirements of the application of drives.

(source: these definitions were extracted from the product standard IEC/EN61800-3 (1996) + A11 (2000))

(5) For installation with inverters that complies Category C2 (first environment restricted distribution), note that this is a product of restricted sales distribution class according to IEC/EN61800-3 (1996) + A11 (2000). In a domestic environment this product may cause radio interference in which case the user may be required to take adequated measures.

(6) For installation with inverters that complies Category C3 (second environment unrestricted distribution), refer to table 3.7.
Note that this product is not intended to be used on a low-voltage public network which supplies domestic premises. If this product is used in networks that supply domestic premises, there is the possibility of radio frequency interference.

3.3.3 Inverter Models and Filters

Table 3.8 below shows the inverter models and the respective RFI filter and the EMC category. The description of each EMC categories is given in item 3.3.2. The characteristics of the footprint and external input RFI filters are given in item 3.3.4.

Id	Inverter Model	Input RFI Filter	Conducted Emission Level	Radiated Emission Level
1	CFW080016S2024...FAZ	FEX1-CFW08 (footprint filter)	Category C2 or Category C3	Category C3
2	CFW080026S2024...FAZ			
3	CFW080040S2024...FAZ			
4	CFW080016B2024...FAZ (single-phase input)			
5	CFW080026B2024...FAZ (single-phase input)			
6	CFW080040B2024...FAZ (single-phase input)			
7	CFW080073B2024...FAZ (single-phase input)	Built-in Filter		
8	CFW080100B2024...FAZ (single-phase input)			
9	CFW080016S2024...	FS6007-16-06 or B84142-A30-R122 (external filter)	Category C1	Category C2
10	CFW080026S2024...			
11	CFW080040S2024...			
12	CFW080016B2024... (single-phase input)			
13	CFW080026B2024... (single-phase input)			
14	CFW080040B2024... (single-phase input)			
15	CFW080016B2024... (three-phase input)	FN3258-7-45 or B84143-B8-R110 (external filter)		
16	CFW080026B2024... (three-phase input)			
17	CFW080040B2024... (three-phase input)			
18	CFW080070T2024...	FN3258-16-45 or B84143-B16-R110 (external filter)		
19	CFW080073B2024... (single-phase input)	FS6007-25-08 or B84142-A30-R122 (external filter)		
20	CFW080073B2024... (three-phase input)	FN3258-16-45 or B84143-B25-R110 (external filter)		
21	CFW080100B2024... (single-phase input)	FS6007-36-08 or B84142-A30-R122 (external filter)		
22	CFW080100B2024... (three-phase input)	FN3258-16-45 or B84143-B25-R110 (external filter)		
23	CFW080160T2024...	FN3258-30-47 or B84143-B36-R110 (external filter)		

Table 3.8 *- Inverter models list with filters and EMC category*

Id	Inverter Model	Input RFI Filter	Conducted Emission Level	Radiated Emission Level
24	CFW080220T2024...	B84143-B36-R110 (external filter)	Category C1	Category C2
25	CFW080280T2024...	B84143-B50-R110 (external filter)		
26	CFW080330T2024...	B84143-B50-R110 (external filter)	Category C1	Category C2
27	CFW080010T3848...FAZ	FEX2-CFW08 (footprint filter)	Category C2 or Category C3	Category C3
28	CFW080016T3848...FAZ			
29	CFW080026T3848...FAZ			
30	CFW080040T3848...FAZ			
31	CFW080027T3848...FAZ	Built-in filter		
32	CFW080043T3848...FAZ			
33	CFW080065T3848...FAZ			
34	CFW080100T3848...FAZ			
35	CFW080130T3848...FAZ			
36	CFW080160T3848...FAZ			
37	CFW080010T3848...	FN3258-7-45 or B84143-B8-R110 (external filter)	Category C1	Category C2
38	CFW080016T3848...			
39	CFW080026T3848...			
40	CFW080040T3848...			
41	CFW080027T3848...			
42	CFW080043T3848...			
43	CFW080065T3848...	FN3258-16-45 or B84143-B25-R110 (external filter)		
44	CFW080100T3848...			
45	CFW080130T3848...	FN3258-16-45 or B84143-G36-R110 (external filter)		
46	CFW080160T3848...	FN3258-30-47 or B84143-G36-R110 (external filter)		
47	CFW080240T3848...	FN-3258-30-47 or B84143-B50-R110 (external filter)	Category C1	Category C3
48	CFW080300T3848...	FN-3258-55-52 or B84143-B50-R110 (external filter)	Category C1	
49	CFW080240T3848...FAZ	Built-in filter	Category C3	Category C3
50	CFW080300T3848...FAZ			

Table 3.8 (cont.) *- Inverter models list with filters and EMC category*

Observe the following notes for the models presented on table 3.8:

1) Category C1 drives (for conducted emission) shall be mounted inside a metallic cabinet so that the radiated emissions stay below the limits for residential applications ("first environment") and restricted distribution (refer to item 3.3.2).
   Category C2 drives (for conducted emission) do not require installation inside metallic cabinets. Exception: models 7 and 8, that need to be mounted inside a cabinet to pass in the radiated emission test for second environment and unrestricted distribution (refer to item 3.3.2). When a metallic

cabinet is required, the maximum length of the remote keypad cable is 3 m (9.84 ft). In this case, the remote keypad, the control and signal wiring must be located inside the cabinet (the remote keypad can be installed in the cabinet front door, refer to items 8.6.1 and 8.8).

2) The maximum switching frequency is 10 kHz. Exception: 5 kHz for models 27 up to 36 and models 47 to 450.
For Class A1 systems also refer to note 7.

3) The maximum motor cable length is 50 m (164 ft) for models from 49 and 50, 20 m (65.6 ft) for models from 9 to 26, and from 37 to 40,47 and 48, 10 m (32.8 ft) for models from 1 to 8, 27 to 30 and 41 to 46 and 5 m (16.4 ft) for models from 31 to 36. For Category C2 systems also refer to note 7.

4) In models 31 to 34 (also refer to note 7), a CM choke at inverter output is required: TOR1-CFW08, 1 turn. The toroid is mounted inside the N1 kit that is provided with these models. For installation refer to figure 3.19.

5) In models from 41 to 46, a CM choke at filter input is required: TOR2-CFW08, 3 turns. For installation refer to figure 3.19.

6) In models 41 to 44, it is required to use a shielded cable between the external filter and the inverter.

7) Category C2 drives were also tested using the limits of conducted emission for industrial applications (“second environment”) and unrestricted distribution, i.e., Category C3 (refer to notes 2 and 3 in item 3.3.2 for definitions).
In this case:
- The maximum cable length is 30 m (98.4 ft) for models from 1 to 8, 35 and 36 and 20 m (65.6 ft) for models from 27 to 34;
- The maximum switching frequency is 10 kHz for models 31 to 34 and 5 kHz for models from 1 to 8, 27 to 30, 35 and 36;
- Models 31 to 34 do not require any CM choke at inverter output (as stated in note 4).

3.3.4 EMC Filters Characteristics

Filter	Manufacturer	WEG P/N	Rated Current	Weight (kg/lb)	Dimensions (Width x Height x Depth in mm [in])	Drawings
FEX1-CFW08	WEG	417118238	10 A	0.6/1.32	79x190x51 [3.11x7.48x2]	Figure 3.20
FEX2-CFW08		417118239	5 A			
FS6007-16-06	Schaffner	0208.2072	16 A	0.9/1.98	85.5x119x57.6 [3.37x4.68x2.27]	Figure 3.21
FS6007-25-08		0208.2073	25 A	1.0/2.2	85.5x119x57.6 [3.37x4.68x2.27]	Figure 3.22
FS6007-36-08		0208.2074	36 A	1.0/2.2		
FN3258-7-45		0208.2075	7 A	0.5/1.1	40x190x70 [1.57x7.48x2.76]	Figure 3.23
FN3258-16-45		0208.2076	16 A	0.8/1.76	45x250x70 [1.77x9.84x2.76]	
FN3258-30-47		0208.2077	30 A	1.2/2.64	50x270x85 [1.97x10.63x3.35]	
FN3258-55-52		0208.2078	55 A	1.8/3.97	85x250x90 [3.35x9.84x3.54]	
TOR1-CFW08	Thornton	417100895	-	0.08/0.18	ϕe = 35 [1.38], h = 22 [0.87]	Figure 3.24
TOR2-CFW08		47100896	-	0.125/0.276	ϕe = 52 [2.05], h = 22 [0.87]	Figure 3.25
B84142-A16-R122	EPCOS	10951110	16 A	1.1/2.42	46,4x231x70 [1.83x9.09x2.76]	Figure 3.26
B84142-A30-R122	EPCOS	10951111	30 A	1.7/3.75	58x265x90 [2.28x10.43x3.54]	Figure 3.27
B84143-B16-R110	EPCOS	10951374	16 A	1.5/3.3	46x230x80 [1.81x9.05x3.15]	Figure 3.28
B84143-A16-R105	EPCOS	0208.2127	16 A	0.90/1.98	46,4x231x70 [1.83x9.09x2.76	Figure 3.29
B84143-B36-R110	EPCOS	10951375	36 A	3.2/7.05	56x280x150 [2.2x11.02x5.9]	Figure 3.30
B84143-A36-R105	EPCOS	0208.2129	36 A	1.75/3.86	58x265x90 [2.28x10.43x3.54]	Figure 3.31
B84143-B50-R110	EPCOS	10951401	50 A	3.7/8.16	56x330x150 [2.2x13x5.9]	Figure 3.32
B84143-A50-R105	EPCOS	0208.2130	50 A	1.75/3.86	58x265x90 [2.28x10.43x3.54]	Figure 3.33
B84143-B8-R110	EPCOS	10951398	8 A	1.5/3.3	46x230x80 [1.81x9.05x3.15]	Figure 3.34
B84143-B25-R110	EPCOS	10951404	25 A	2.7/5.95	56x280x150 [2.2x11.02x5.9]	Figure 3.35
B84143-G36-R110	EPCOS	10951437	36 A	2.8/6.17	56x280x150 [2.2x11.02x5.9]	Figure 3.36

Table 3.9 *- EMC filters characteristics*

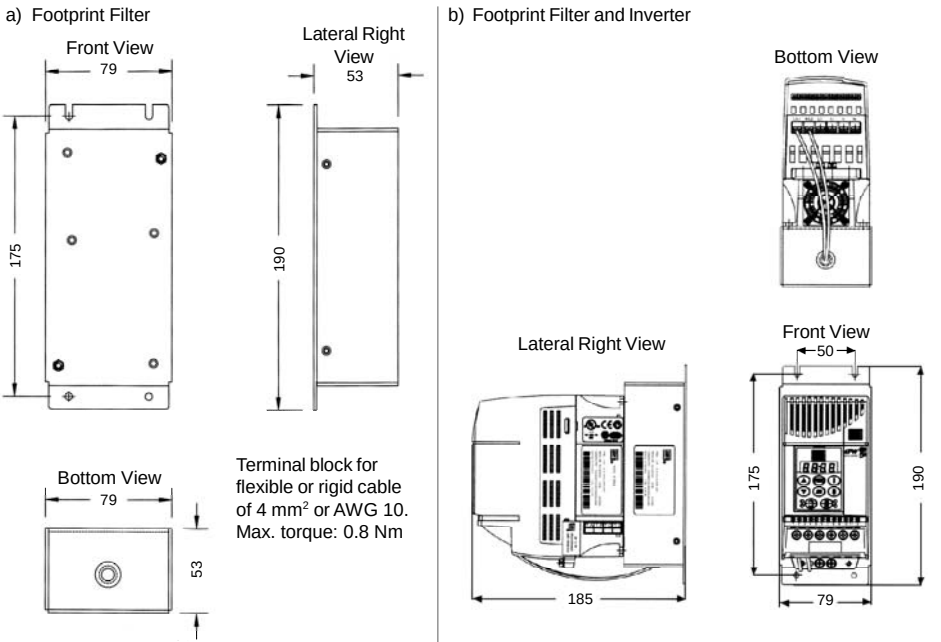

Note: figure dimensions are in mm.

Figure 3.20 a) and b) *- FEX1-CFW08 and FEX2-CFW08 footprint filter drawing*

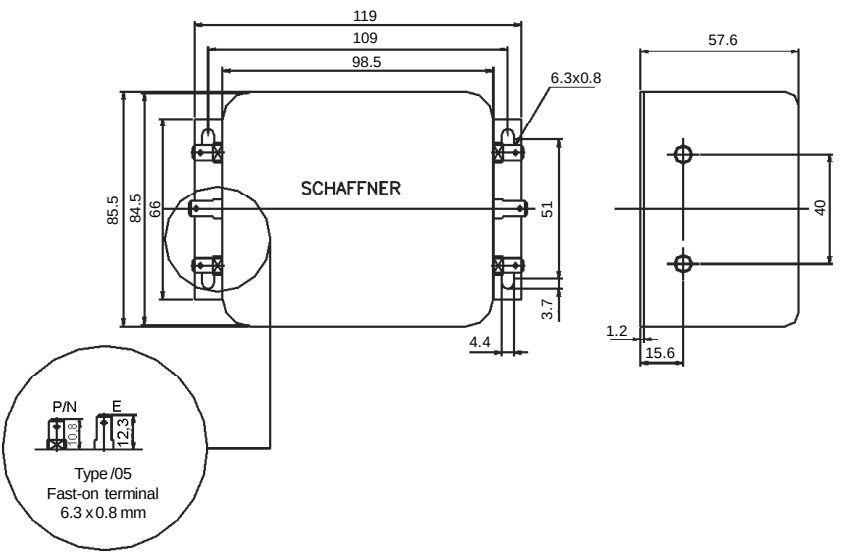

Note: figure dimensions are in mm.

Figure 3.21 *- FS6007-16-06 external filter drawing*

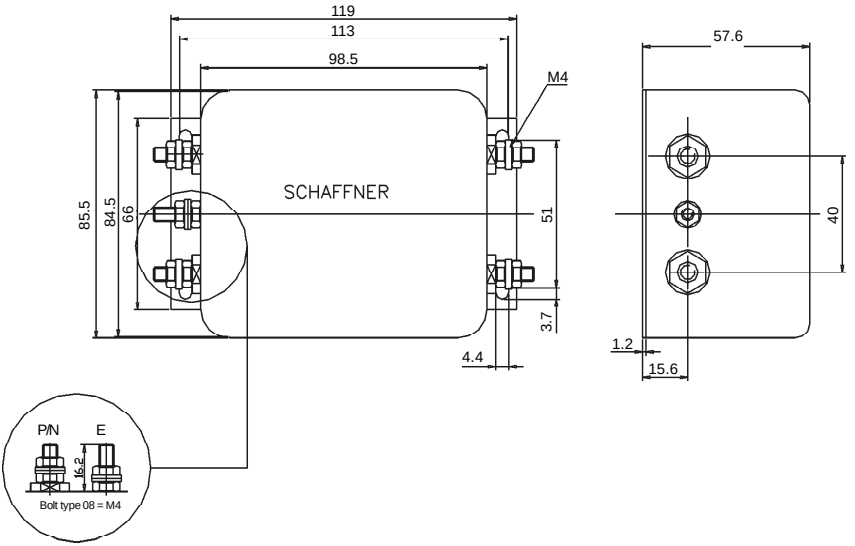

Note: figure dimensions are in mm.

Figure 3.22 *- FS6007-25-08 and FS6007-36-08 external filter drawing*

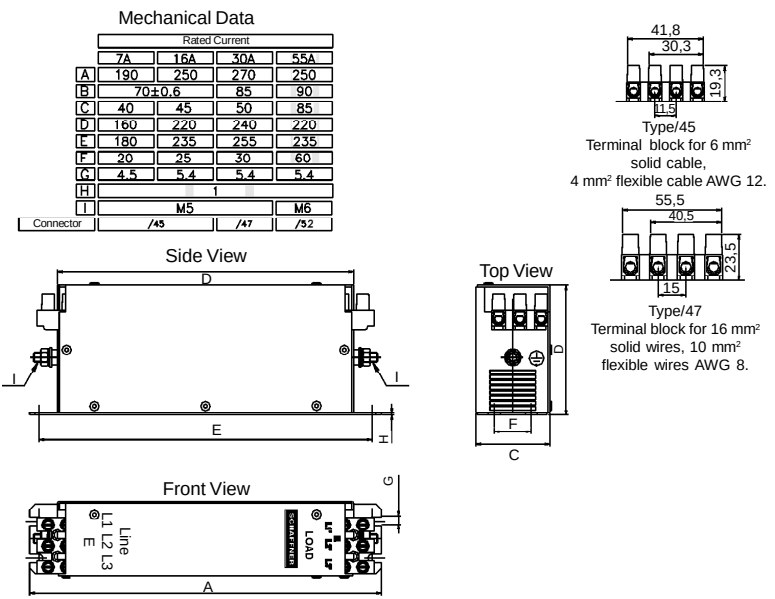

	Rated Current			
	7A	16A	30A	55A
A	190	250	270	250
B	70±0.6		85	90
C	40	45	50	85
D	160	220	240	220
E	180	235	255	235
F	20	25	30	60
G	4.5	5.4	5.4	5.4
H	1			
I	M5			M6
Connector	/45		/47	/52

Note: figure dimensions are in mm.

Figure 3.23 *- FN3258-7-45, FN3258-16-45, FN3258-30-47 and FN3258-55-52 external filters drawing*

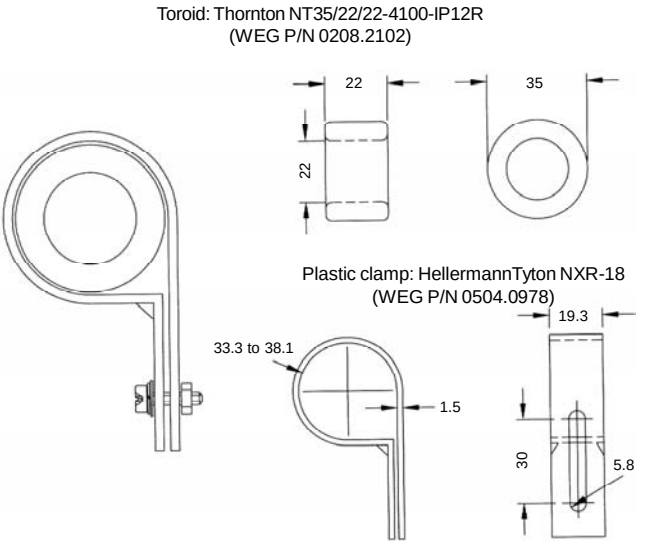

Note: figure dimensions are in mm.

Figure 3.24 *- TOR1-CFW08 drawing*

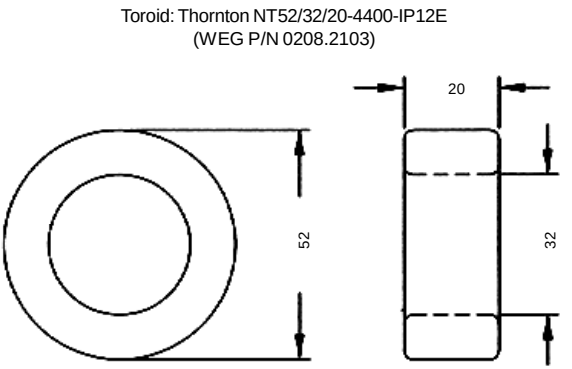

Note: figure dimensions are in mm.

Figure 3.25 *- TOR2-CFW08 drawing*

NOTE!
The following filters drawings belong to Epcos. It is possible to get further information about them in the Epcos website.

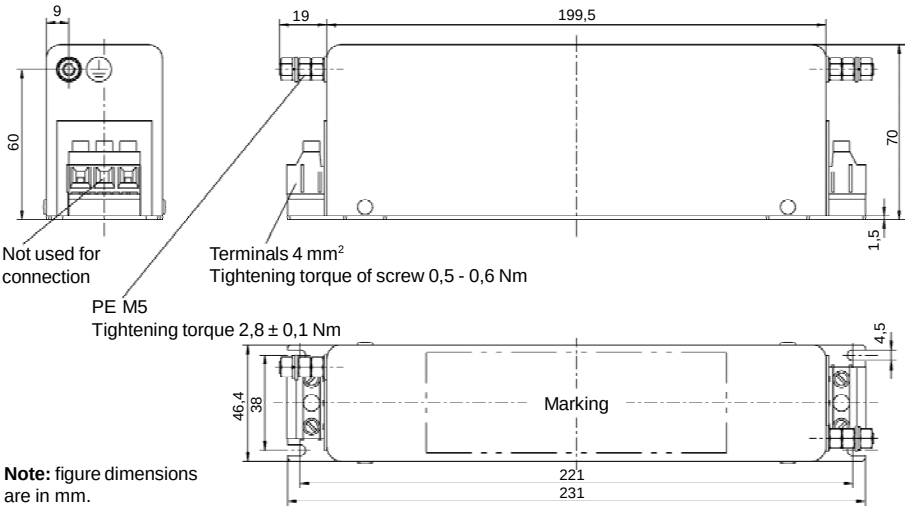

Figure 3.26 *- External filter drawing B84142-A16-R122*

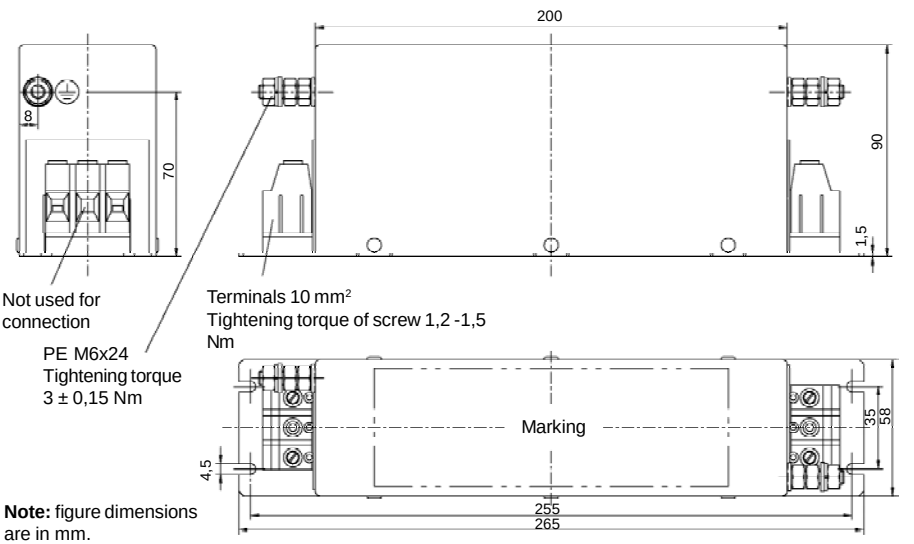

Figure 3.27 *- External filter drawing B84142-A30-R122*

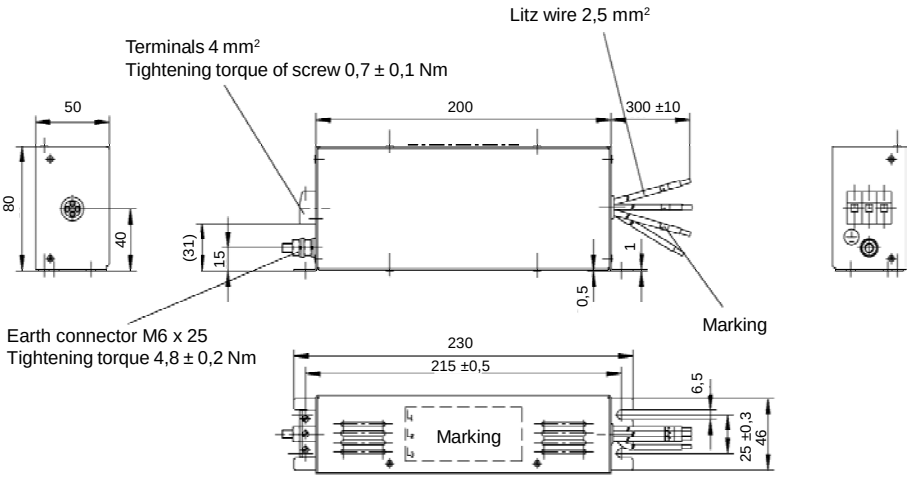

Note: figure dimensions are in mm.

Figure 3.28 *- External filter drawing B84143-B16-R110*

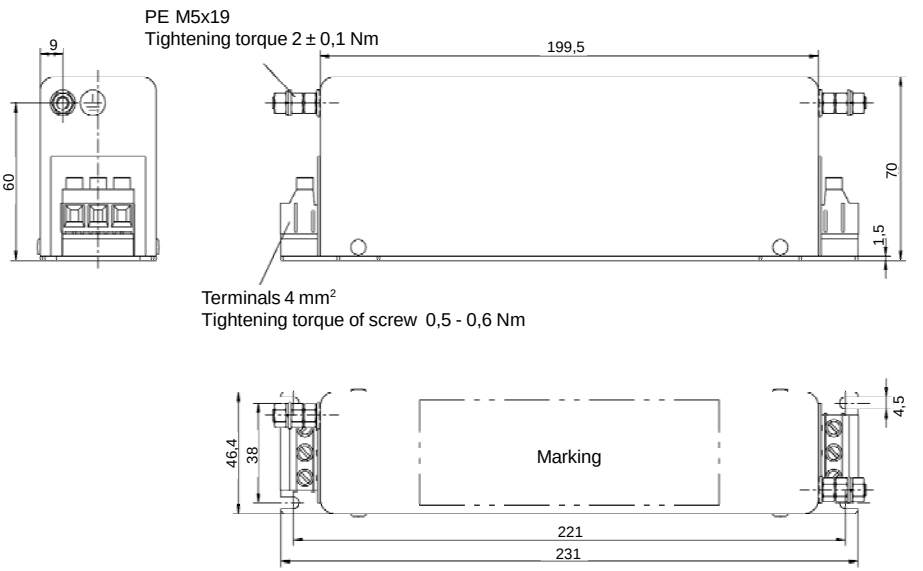

Note: figure dimensions are in mm.

Figure 3.29 *- External filter drawing B84143-A16-R105*

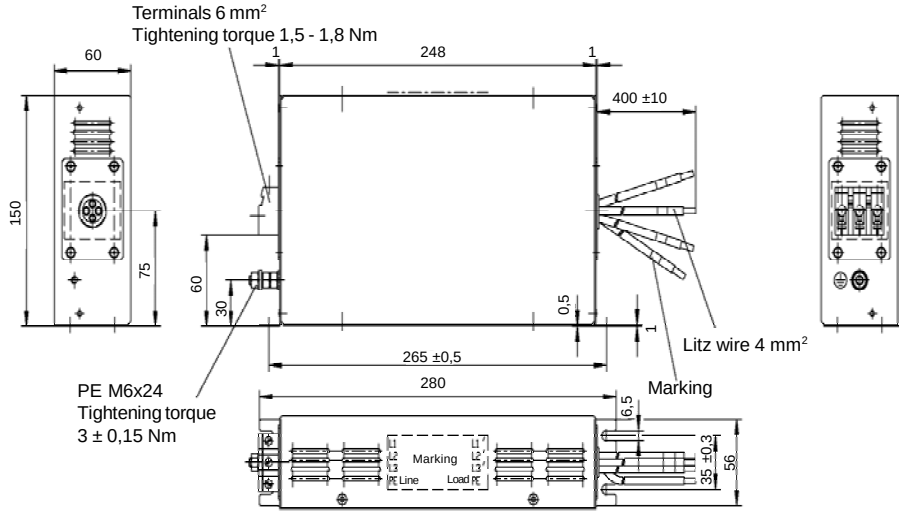

Note: figure dimensions are in mm.

Figure 3.30 *- External filter drawing B84143-B36-R110*

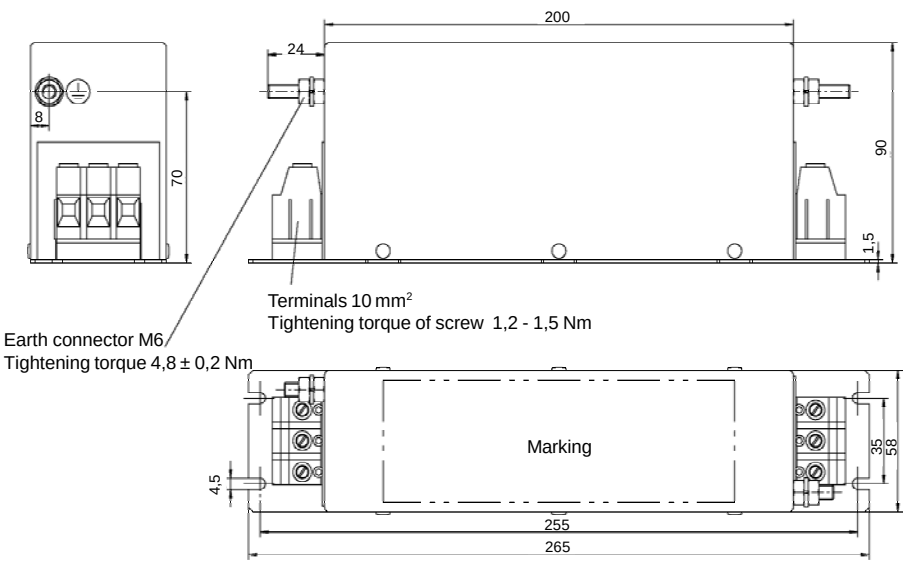

Note: figure dimensions are in mm.

Figure 3.31 *- External filter drawing B84143-A36-R105*

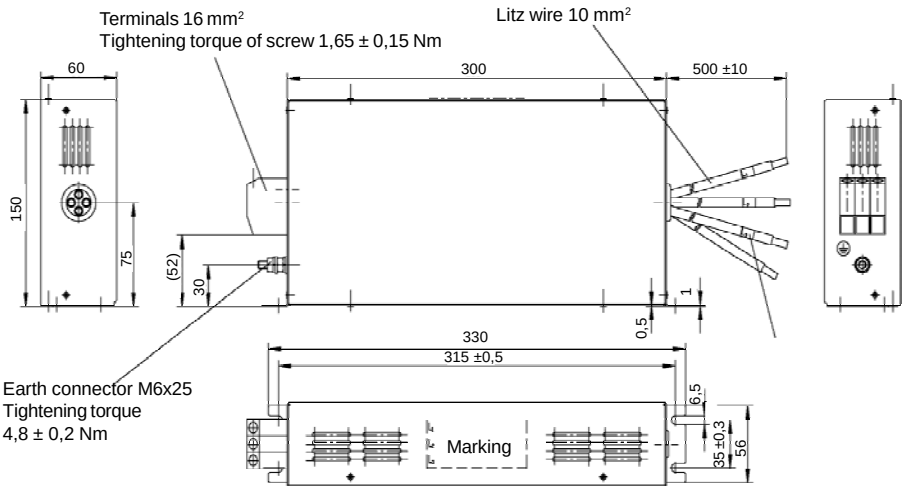

Note: figure dimensions are in mm.

Figure 3.32 *- External filter drawing B84143-B50-R110*

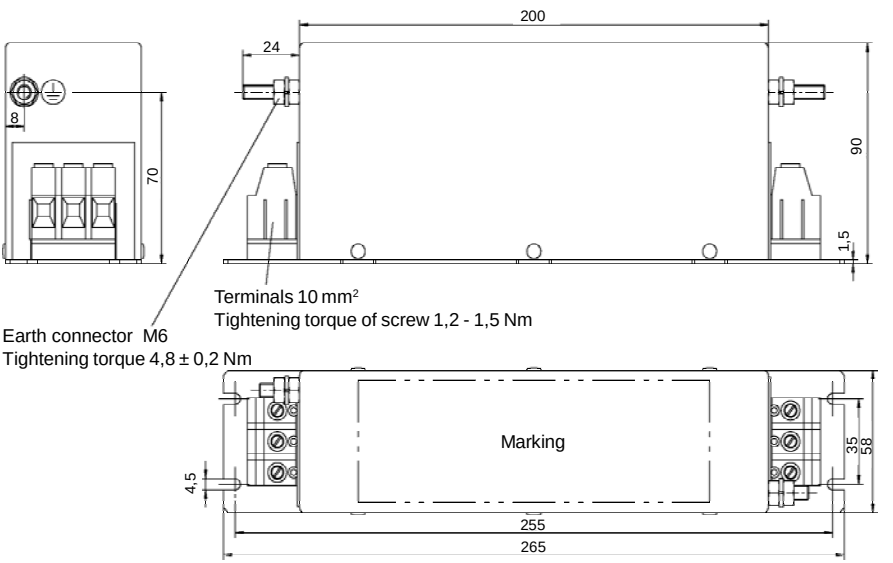

Note: figure dimensions are in mm.

Figure 3.33 *- External filter drawing B84143-A50-R105*

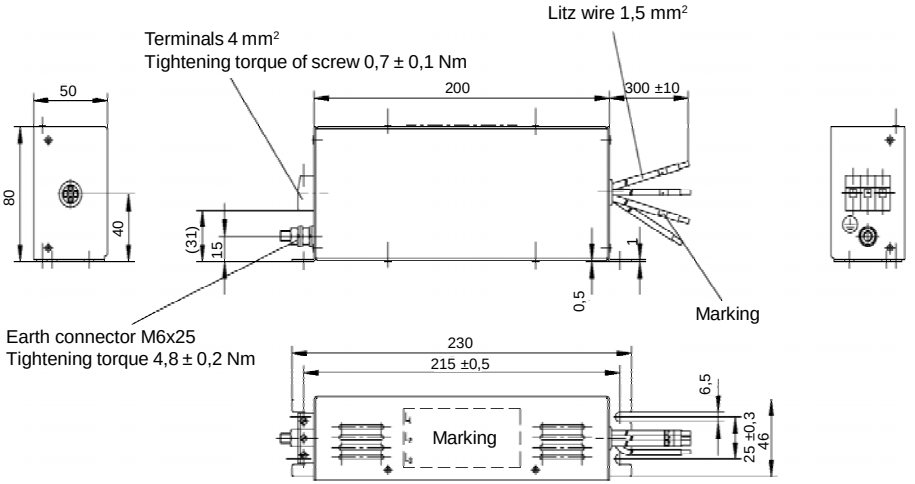

Note: figure dimensions are in mm.

Figure 3.34 - *External filter drawing B84143-B8-R110*

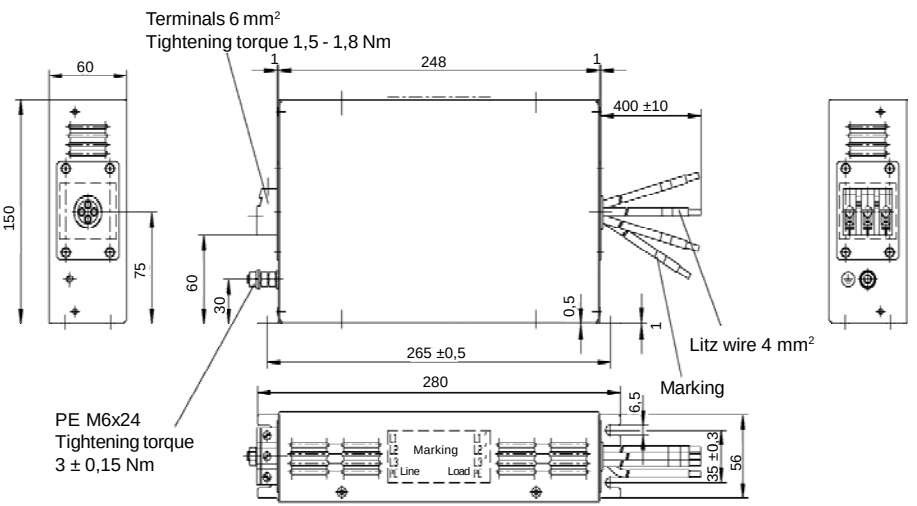

Note: figure dimensions are in mm.

Figure 3.35 - *External filter drawing B84143-B25-R110*

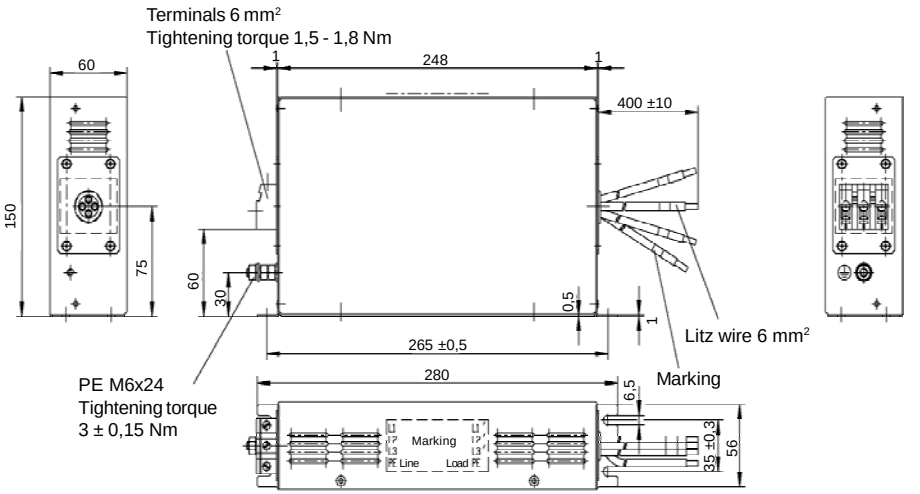

Note: figure dimensions are in mm.

Figure 3.36 *- External filter drawing B84143-G36-R110*

NOTE!
The declaration of conformity CE is available on the website www.weg.net or on the CD, which comes with the products.

KEYPAD (HMI) OPERATION

This chapter describes the standard Human Machine Interface (HMI) of the inverter (HMI-CFW08-P) and the manner to use it, presenting the following information:

- ☑ General keypad description.
- ☑ Use of the keypad.
- ☑ Parameter programming and reading.
- ☑ Description of the status indications and signalizations.

4.1 KEYPAD (HMI) DESCRIPTION

The standard CFW-08 keypad has a LED display with 4 digits of 7 segments, 4 status LEDs and 8 keys. Figure 4.1 shows the front view of the keypad and indicates the position of the display and the status LEDs.

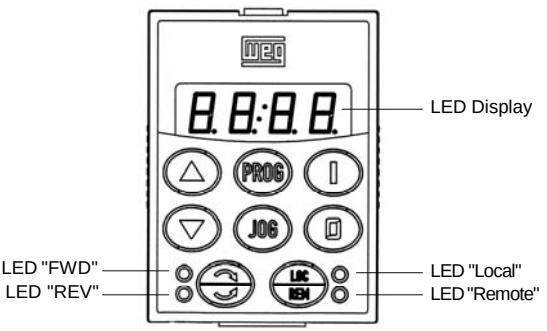

Figure 4.1 *- CFW-08 standard keypad*

Functions of the LED display:
The LED display shows the fault codes and drive status (refer to Quick Parameter Reference, Fault Messages), the parameter number and its value. The unit display (rightmost) indicates the unit of some variables [U = volts, A = Ampères, °C = Celsius degrees].

Functions of the “Local” and “Remote” LEDs:

Inverter in Local mode:
Green LED ON and red LED OFF.

Inverter in Remote mode:
Green LED OFF and red LED ON.

Functions of the FWD/REV LEDs - Direction of rotation
Refer to figure 4.2.

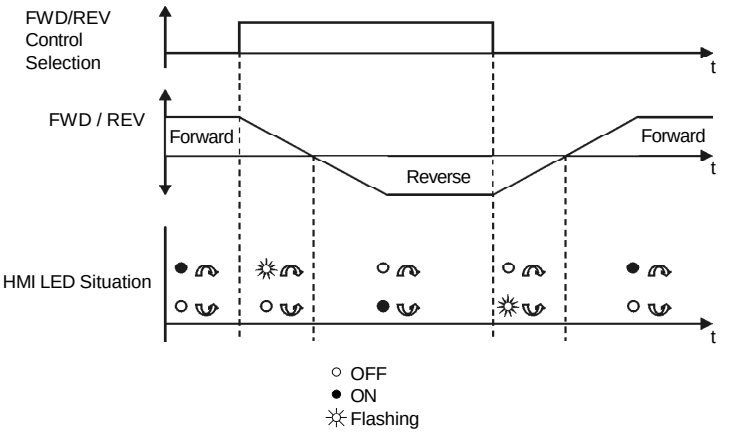

Figure 4.2 *- Direction of rotation (FWD/REV) LEDs*

Basic functions of the keys:

Starts the inverter via acceleration ramp.

Stops (disables) the inverter via deceleration ramp.
Also resets inverter after a fault has occurred.

Toggles the LED display between parameter number and its value (number/value).

Increases the frequency, the parameter number or the parameter value.

Decreases the frequency, the parameter number or the parameter value.

Reverses the direction of motor rotation between Forward/ Reverse

Toggles between the LOCAL and REMOTE modes of operation.

Performs the JOG function when pressed. Any DI programmed for General Enable (if any) must be closed to enable the JOG function.

4.2 USE OF THE KEYPAD (HMI)

The keypad is used for programming and operating the CFW-08, allowing the following functions:

- ☑ Indication of the inverter status and operation variables.
- ☑ Fault indication and diagnostics.
- ☑ Viewing and programming parameters.

- ☑ Operation of the inverter (keys I, 0, ⟲, LOC/REM and JOG) and speed reference setting (keys ▲ and ▼).

4.2.1 Keypad Operation

All functions relating to the CFW-08 operation (Start/Stop, Direction of Rotation, JOG, Increment/Decrement, Speed (Frequency) Reference, and selection of Local/Remote mode) can be performed through the HMI selection.
For factory default programming of the inverter, all keypad keys are enabled when the Local mode has been selected.
These same functions can be performed through digital and analog inputs. Thus you must program the parameters related to these corresponding inputs.

NOTE!
The control keys I, 0 and JOG are only enabled if:
- ☑ P229 = 0 for Local mode operation.
- ☑ P230 = 0 for Remote mode operation.
- ☑ The key ⟲ depends of the parameters above and if: P231 = 2.

Keypad keys operation description:

LOC/REM: When enabled (P220 = 2 or 3), selects the control input and the speed reference (speed) source, toggling between Local and Remote Mode.

I: When pressed, starts the motor according to acceleration ramp up to the speed (frequency) reference. The function is similar to that performed through digital input Start/Stop, when it is closed (enabled) and maintained enabled.

0: Disables the inverter via deceleration ramp.The Function is similar to that performed through digital input Start/Stop, when it is open (disabled) and maintained disabled.

JOG: When the JOG key is pressed, it accelerates the motor according to the acceleration ramp up to the JOG speed programmed in P122.
This key is only enabled when the inverter digital input, programmed to Start/Stop (if any) is open and the digital input programmed to General Enable (if any) is closed.

⟲: When enabled, reverses the motor direction of rotation.

▲ ▼: Motor speed (frequency) setting: these keys are enabled for speed setting only when:
- ☑ The speed reference source is the keypad (P221 = 0 for Local Mode and/or P222 = 0 for Remote Mode).
- ☑ The following parameter content is displayed: P002, P005 or P121.

Parameter P121 stores the speed (frequency) reference set by the keys:

When pressed, it increases the speed (frequency) reference.

When pressed, it decreases the speed (frequency) reference.

Reference Backup:
The last frequency reference set by the keys and is stored when inverter is stopped or the AC power is removed, provided P120 = 1 (reference backup active is the factory default). To change the frequency reference before starting the inverter, the value of the parameter P121 must be changed.

4.2.2 Inverter Status

Inverter is Ready to be started.

Line voltage is too low for inverter operation (undervoltage condition).

Inverter is in a fault condition. Fault code is flashing on the display. In the example there is the fault code E02 (refer to chapter 7).

Inverter is applying a DC current on the motor (DC braking) according to the values programmed at P300, P301 and P302 (refer to chapter 6).

Inverter is running self-tuning routine to identify motor parameters automatically. This operation is controlled by P408 (refer to chapter 6).

COPY function (available only at the HMI–CFW08-RS), it copies the inverter programming into the HMI.

COPY function (available only at the HMI–CFW08-RS), it copies the programming from the HMI into the inverter.

Inverter in the Sleep rdy mode.

NOTE!
The display also flashes in the following conditions, besides the fault conditions:
- ☑ Trying to change a parameter value when it is not allowed.
- ☑ Inverter in overload condition (refer to chapter 7).

4.2.3 Read-Only Parameters

Parameters P002 to P099 are reserved for the display of read-only values.
The factory default display when power is applied to the inverter is P002 (frequency proportional value in V/F control mode (P202 = 0 or 1) and motor speed in rpm in vector control mode (P202 = 2)).
Parameter P205 defines the initial monitoring parameter, i.e., defines the read-only variable that will be displayed when the inverter is powered up. For further information refer to P205 description in chapter 6.

4.2.4 Parameter Viewing and Programming

All CFW-08 settings are made through parameters. The parameter are shown on the display by the letter **P** followed by a number:
Example (P101):

101 = Parameter Number

Each parameter is associated with a numerical value (parameter value), that corresponds to the selected option among the available ones for this parameter.

The parameter values define the inverter programming or the value of a variable (e.g.: current, frequency, voltage).For inverter programming you should change the parameter content(s).

It is necessary to set P000 = 5 before to change a parameter value. Otherwise you can only read the parameter values, but not reprogram them. For more details, refer to the parameter P000 description in chapter 6.

ACTION	HMI DISPLAY	DESCRIPTION
Turn ON the inverter	rdy	Inverter is ready to be started
Press the PROG key	P002	
Use the keys ▼ and ▲	P100	Select the desired parameter
Press the PROG key	5.0	Numerical value associated with the parameter (4)
Use the keys ▼ and ▲	6.1	Set the new desired value (1) (4)
Press the PROG key	P100	**(1) (2) (3)**

NOTE!

(1) For parameters that can be changed with the motor running, the inverter will use the new value immediately after it has been set. For parameters that can be changed only with motor stopped, the inverter will use this new value only after the key PROG is pressed.

(2) By pressing the PROG key after the reprogramming, the new programmed value will be stored automatically and will remain stored until a new value is programmed.

(3) If the last programmed value in the parameter is not functionally compatible with other parameter values already programmed, E24 = Programming Error, will be displayed. Example of programming error:
Programming of two digital inputs (DI) with the same function. Refer to table 4.1 for list of programming errors that can generate an E24 Programming Error.

(4) To allow the reprogramming of any parameter value (except for P000 and P121) it is required to set P000 = 5.
Otherwise you can only read the parameter values, but not reprogram them. For more details, refer to the parameter P000 description in chapter 6.

Programming Error – E24

JOG	P265 = 3 and other(s) DI(s) ≠ Start-Stop or FWD and REV or ON and OFF P266 = 3 and other(s) DI(s) ≠ Start-Stop or FWD and REV or ON and OFF P267 = 3 and other(s) DI(s) ≠ Start-Stop or FWD and REV or ON and OFF P268 = 3 and other(s) DI(s) ≠ Start-Stop or FWD and REV or ON and OFF
Local/Remote	Two or more parameters between P264, P265, P266, P267 and P268 equal to 1 (LOC/REM)
Disables Flying Start	P265 = 13 and P266 = 13 or P267 = 13 or P268 = 13
Reset	P265 = 10 and P266 = 10 or P267 = 10 or P268 = 10
On/Off	P263 = 14 and P264 ≠ 14 or P263 ≠ 14 and P264 = 14
Direction of Rotation	Two or more parameters P264, P265, P266, P267 and P268 = 0 (Direction of Rotation)
FWD/REV	P263 = 8 and P264 ≠ 8 and P264 ≠ 13 P263 = 13 and P264 ≠ 8 and P264 ≠ 13 P263 ≠ 8 and P263 ≠ 13 and P264 = 8 P263 = 8 or 13 and P264 = 8 or 13 and P265 = 0 or P266 = 0 or P267 = 0 or P268 = 0 P263 = 8 or 13 and P264 = 8 or 13 and P231 ≠ 2
Multispeed	P221 = 6 or P222 = 6 and P264 ≠ 7 and P265 ≠ 7 and P266 ≠ 7 and P267 ≠ 7 and P268 ≠ 7 P221 ≠ 6 and P222 ≠ 6 and P264 = 7 or P265 = 7 or P266 = 7 or P267 = 7 and P268 = 7
Electronic Potentiometer	P221 = 4 or P222 = 4 and P265 ≠ 5 or 16 and P266 ≠ 5 or 16 and P267 ≠ 5 or 16 and P268 ≠ 5 or 16 P221 ≠ 4 or P222 ≠ 4 and P265 = 5 or 16 or P266 = 5 or 16 or P267 = 5 or 16 or P268 = 5 or 16 P265 = 5 or 16 and P266 ≠ 5 or 16 and P268 ≠ 5 or 16 P266 = 5 or 16 and P265 ≠ 5 or 16 and P267 ≠ 5 or 16 P267 = 5 or 16 and P266 ≠ 5 or 16 and P268 ≠ 5 or 16 P268 = 5 or 16 and P265 ≠ 5 or 16 and P267 ≠ 5 or 16
Rated Current	P295 incompatible with the inverter model
DC Braking and Ride-through	P300 ≠ 0 and P310 = 2 or 3
PID	P203 = 1 and P221 = 1,4,5,6,7 or 8 or P222 = 1,4,5,6,7 or 8
Ramp 2	P265 = 6 and P266 = 6 or P265 = 6 and P267 = 6 or P265 = 6 and P268 = 6 P266 = 6 and P267 = 6 or P267 = 6 and P268 = 6 or P266 = 6 and P268 = 6 P265 = 6 or P266 = 6 or P267 = 6 or P268 = 6 and P263 = 13 P265 = 6 or P266 = 6 or P267 = 6 or P268 = 6 and P264 = 13 P265 = 6 or P266 = 6 or P267 = 6 or P268 = 6 and P263 = 13 P265 = 6 or P266 = 6 or P267 = 6 or P268 = 6 and P264 = 13
Model	P221 = 2,3,7 or 8 and standard inverter P221 = 2,3,7 or 8 and standard inverter
Analog Input	P221 = 1 or P222 = 1 and P235 = 2, 3, 4 or 5 P221 or P222 = 2 or 3 and P239 = 2, 3, 4 or 5

Table 4.1 *- Incompatibility of parameters - E24*

NOTE!
It is possible that during programming occurs the error E24 caused by incompatibility between some parameters already programmed.
In this case do not stop with the parameter setting. If at the end of the parameter setting does not disappear, check the table of incompatibilities (table 4.1).

START-UP

This chapter provides the following information:

- ☑ How to check and prepare the inverter before power-up.
- ☑ How to power-up and check for proper operation.
- ☑ How to operate the inverter when it is installed according to the typical connections (refer to item 3.2 - Electrical Installation).

5.1 PRE-POWER CHECKS

The inverter shall be installed according to Chapter 3 - Installation and Connection. If the drive project is different from the typical suggested connections, follow the procedures below.

DANGER!
Always disconnect the AC input power before making any connections.

1) Check all connections
Check if the power, grounding and control connections are correct and well tightened.

2) Check the motor
Check all motor connections and verify if its voltage and current match the inverter specifications.

3) Uncouple the load from the motor
If the motor can not be uncoupled, make sure that the direction of rotation (FWD/REV) can not cause damage to the machine.

5.2 INITIAL POWER-UP

After the inverter has been checked, AC power can be applied:

1) Check the power supply
Measure the line voltage and check if it is within the specified range (rated voltage: -15 % / +10 %).

2) Power-up the AC input
Close the input circuit breaker or disconnect switch.

3) Check if the power-up has been successful

- Inverter with keypad (HMI-CFW08-P or HMI-CFW08-RS) or HMI-CFW08-RP

The keypad display will show:

The four LEDs of the keypad remains ON during this procedure. Inverter runs some self-diagnosis routines. If no problems are found, the display shows:

This means that the inverter is ready (rdy = ready) to be operated.

- Inverter with dummy panel (TCL-CFW08 or TCR-CFW08).

The LEDs ON (green) and ERROR (red) are ON.
Inverter runs some self-diagnosis routines. If no problems are found the LED ERROR (red) turns OFF. This means that the inverter is now ready to be operated.

5.3 START-UP

This section describes start-up procedures when operating via the keypad (HMI). Two types of control will be considered:

V/F and Vector Control:
The V/F control is recommended in the following cases:

- ☑ Several motors driven by the same inverter.
- ☑ Rated current of the motor is lower than 1/3 of rated inverter current.
- ☑ For test purposes, inverter is start-up without load.

The V/F control can also be used in applications that do not require fast dynamic responses, accurate speed regulations or high starting torque (speed error will be a function of the motor slip); when you program parameter P138 - Slip Compensation - you can obtain a speed accuracy of 1 %.
For the most applications, we recommend the vector control mode, that permits a higher speed control accuracy (typical 0.5 %), higher starting torque and a faster dynamic response. The necessary adjustments for the operation of the vector control are performed automatically. In this case the motor shall be connected to the CFW-08.

DANGER!
Even after the AC power supply has been disconnected, high voltages may be still present. Wait at least 10 minutes after powering down to allow full discharge of the capacitors.

5.3.1 Start-up - Operation via Keypad (HMI) - Type of Control: Linear V/F (P202 = 0)

The sequence below is valid for the connection 1 (refer to item 3.2.6). Inverter must be already installed and powered up according to chapter 3 and item 5.2.

Connections according to figure 3.6.

ACTION	HMI DISPLAY	DESCRIPTION
Power-up the inverter	rdy	Inverter is ready to be operated
Press the I key	3.00	Motor accelerates from 0 Hz to 3 Hz(*) (minimum frequency), in the forward (CW) direction of rotation (1)
Press the ▲ key and hold it depressed until 60 Hz is reached	60.00	Motor accelerates up to 60 Hz(**) (2)
Press the key	60.00	Motor decelerates (3) down to 0 rpm and then reverses the direction of rotation CW⇒CCW accelerating back to 60 Hz
Press the 0 key	rdy	Motor decelerates down to 0 rpm
Press the JOG key and hold it depressed	5.00	Motor accelerates up to JOG frequency given by P122. **Ex:** P122 = 5.00 Hz Reverse (CCW)
Release the JOG key	rdy	Motor decelerates down to 0 rpm

(*) 90 rpm for 4 pole motor.
(**) 1800 rpm for 4 pole motor.

NOTE!
The last frequency reference (speed) value set via the ▲ and ▼ keys is saved.

If you wish to change this value before inverter enabling, change parameter P121 - Keypad Reference.

NOTES!

(1) If the direction of rotation of the motor is not correct, switch off the inverter. Wait at least for 10 minutes to allow complete capacitor discharge and then swap any two wires at the motor output.

(2) If the acceleration current becomes too high, mainly at low frequencies, set the torque boost (IxR compensation) at P136. Increase/decrease the content of P136 gradually until you obtain an operation with constant current over the entire frequency range.
For the case above, refer to parameter description in chapter 6.

(3) If E01 fault occurs during deceleration, increase the deceleration time at P101 / P103.

5.3.2 Start-up - Operation via Terminals - Control Mode: Linear V/F (P202 = 0)

Connections are according to figures 3.6 and 3.16.

ACTION	HMI DISPLAY	DESCRIPTION
Refer to figure 3.16 Switch S1 (FWD / REV) = open Switch S2 (Reset) = open Switch S3 (Start/Stop) = open Potentiometer R1 (Ref.) = totally CCW Power-up inverter	rdy	Inverter is ready to be operated
Press the LOC REM key. This procedure is not necessary when inverters were delivered dummy panel, since it will be automatically in remote mode	rdy	Local LED switches OFF and remote LED switches ON. Control and Reference are switched to remote (via terminals) **Note:** To maintain inverter permanently in remote mode, set P220 = 1. If the inverter is switched off and afterwards switched on, it will now operate in local mode because P220 = 2 (factory setting). This setting means that the local/remote selection source is via keypad and the default mode (that is the mode when the inverter is switched on) is local. For further information refer to the description of P220 in chapter 6
Close **S3** – Start/Stop	3.00	Motor accelerates from 0 Hz to 3 Hz(*) (minimum frequency), CW direction (1) The frequency reference is given by the potentiometer R1
Turn potentiometer totally CW	66.00	Motor accelerates up to the maximum frequency (P134 = 66 Hz) (2)
Close **S1** – FWD / REV	66.00	Motor decelerates (3) down to 0 rpm (0 Hz), reverses the direction of rotation (FWD/REV) accelerating back up to the maximum frequency (P134 = 66 Hz)
Open **S3** – Start / Stop	rdy	Motor decelerates (3) down to 0 rpm

(*) 90 rpm for 4-pole motor.

NOTES!

(1) If the direction of rotation of the motor is not correct, switch off the inverter. Wait 10 minutes to allow a complete capacitor discharge and swap any two wires at the motor output.

(2) If the acceleration current becomes too high, mainly at low frequencies, set the torque boost (IxR Compensation) at P136.

Increase/decrease the content of P136 gradually until you obtain an operation with constant current over the entire frequency range.
For the case above, refer to parameter description in chapter 6.

(3) If E01 fault occurs during deceleration, increase the deceleration time at P101 / P103.

5.3.3 Start-up - Operation via Keypad - Control Mode: Vector (P202 = 2)

The sequence below is based on the following inverter and motor example:

Inverter: CFW080040S2024ESZ

Motor: WEG-IP55

Power: 0.75 HP/0.55 kW;
Frame size: 71; RPM: 1720; Number of Poles: IV;
Power Factor (cos φ): 0.70;
Efficiency (η): 71 %;
Rated Current at 220 V: 2.90 A;
Frequency: 60 Hz.

ACTION	HMI DISPLAY	DESCRIPTION
Power-up inverter	rdy	Inverter is ready to be operated
Press PROG key. Press the ▲ key until P000 is reached. You can also use the key ▼ to reach the paramater P000	P000	P000 = access for changing parameters
Press the PROG key to enter into the parameter P000 programming mode	0	Enter the programming mode
Use the keys ▲ and ▼ to set the passoword value (P000 = 5)	5	P000 = 5: permits parameter changing
Press the PROG key to save the selected option and to exit the programming mode	P000	Exit the programming mode
Press the key ▲ or ▼ until P202 is reached	P202	This parameter defines the control type 0 = V/F Linear 1 = V/F Quadratic 2 = Vector
Press the PROG key to enter into the parameter P202. programming mode	0	Enter the programming mode

ACTION	HMI DISPLAY	DESCRIPTION
Use the ▲ and ▼ keys to select the control type	2	P202 = 2: Vector
Press PROG to save the selected option and to start the tuning routine after changing to Vector Control mode	P399	Motor efficiency: 50 to 99.9 %
Press the PROG key and use the keys ▲ and ▼ to set the correct rated motor efficiency (in this case 71 %)	71.0	Set motor efficiency: 71 %
Press the PROG key to save the selected option and to exit the programming mode	P399	Exit the programming mode
Press the ▲ key to go to the next parameter	P400	Rated motor voltage range: 0 to 600 V
Press the PROG key and use the keys ▲ and ▼ to set the correct rated motor voltage	220V	Set rated motor voltage: 220 V (the default value is maintained) (2)
Press the PROG key to save the selected option and to exit the programming mode	P400	Exit the programming mode
Press the ▲ key to go to the next parameter	P401	Rated motor current range: 0.3 x I_{nom} to 1.3 x I_{nom}
Press the PROG key and use the keys ▲ and ▼ to set the correct rated motor current (in this case 2.90 A)	2.90A	Set rated motor current: 2.90 A
Press PROG key to save the selected option and to exit the programming mode	P401	Exit the programming mode
Press the ▲ to go to the next parameter	P402	Rated motor rpm range: 0 to 9999 rpm
Press the PROG key and use the keys ▲ and ▼ to set the correct motor speed (in this case 1720 rpm)	1720	Programmed rated motor rpm: 1720 rpm
Press the PROG key to save the selected option and exit the programming mode	P402	Exit the programming mode
Press the ▲ key to go to the next parameter	P403	Rated motor frequency: 0 to F_{max}

ACTION	HMI DISPLAY	DESCRIPTION
Press PROG and use the keys ▲ and ▼ to set the correct value for the motor frequency	60.00	Set rated motor frequency: 60 Hz (the default value is maintained) [2]
Press the PROG key to save the selected option and exit the programming mode	P403	Exit the programming mode
Press the ▲ key to go to the next parameter	P404	Rated motor power range: 0 to 15 (each value represents a power value)
Press the PROG key and use the keys ▲ and ▼ to set the correct motor power	4	Selected rated motor power: 4 = 0.75 HP / 0.55 kW
Press the PROG key to save the selected option and exit the programming mode	P404	Exit the programming mode
Press the ▲ key to go to the next parameter	P407	Motor power factor range: 0.5 to 0.99
Press the PROG key and use the keys ▲ and ▼ to set the correct motor power factor (in this case 0.70)	0.70	Set motor power factor: 0.70
Press the PROG key to save the selected option and exit the programming mode	P407	Exit the programming mode
Press the ▲ key to go to the next parameter	P408	Parameter estimation? 0 = No 1 = Yes
Press the PROG key and use the keys ▲ and ▼ to authorize or not the start of the parameter estimate	1	1 = Yes
Press the PROG key to start the self-tuning routine. While the self-tuning routine is running, the display shows "Auto"	Auto	Self-tuning is running
The running of the Self-Tuning Routine can last until 2 minutes and after ending display will show “rdy” (ready), when the motor parameter were acquired with success. Otherwise the fault “E14” is shown. In this case refer to note [1] below	rdy or E14	Inverter finished the self-tuning routine and is ready for operation, or Running of self-tuning routine has not been realized with success [1]

ACTION	HMI DISPLAY	DESCRIPTION
Press the I key	90.00	Motor accelerates up to 90 rpm (for IV pole motor - minimum speed) in CW direction of rotation (3)
Press the ▲ key and hold it depressed until the speed of 1980 rpm is reached	1980	Motor accelerates up to 1980 rpm (for IV pole motor - maximum speed)
Press the key	1980	Motor decelerates (4) to 0 rpm and then reverses the direction of rotation CW ⇒ CCW, accelerating back to 1980 rpm
Press the 0 key	rdy	Motor decelerates down to 0 rpm
Press the key JOG and hold it depressed	150.0	Motor accelerates from 0 rpm up to the JOG speed set at P122 **Ex:** P122 = 5.00 Hz that corresponds to 150 rpm for IV-pole motor Reverse (CCW) direction of rotation
Release the JOG key	rdy	Motor decelerates down to 0 rpm

NOTE!

☑ The last speed reference value set via key ▲ and ▼ keys is saved.
If you wish to change this value before enabling of inverter, change the value of the parameter P121 - Keypad Reference.

☑ The self-tuning routine can be cancelled by pressing the 0 key.

NOTES!

(1) If during the running of the Self-Tuning Routine the display shows E14, this means that the motor parameters were not acquired correctly by the inverter. The most common reason for this fault may be that the motor has not been coupled to the inverter output. However motors with very lower currents than the used inverter, or incorrect motor connection may also cause the fault E14. In this case, operate the inverter in V/F mode (P202 = 0). When the motor is not connected and the fault condition E14 is indicated, proceed as follows:

☑ Switch off the inverter. Wait at least 10 minutes to allow a complete discharge of the capacitors.

☑ Connect the motor to the inverter output.

☑ Switch on the inverter.
☑ Set P000 = 5 and P408 = 1.
☑ Follow from now on the start-up procedures described in item 5.3.3.

(2) For each inverter type, the parameters P399 to P407 are set automatically to the rated motor data, considering a standard WEG motor, IV poles, 60 Hz.
When different motors are used, you must set the parameters manually, according to the motor nameplate data.

(3) If the direction of rotation of the motor is not correct, switch off the inverter. Wait at least 10 minutes to allow a complete discharge of the capacitors and then swap any two wires at the motor output.

(4) If fault E01 occurs during deceleration, you must increase the deceleration time at P101/P103.

DETAILED PARAMETER DESCRIPTION

This chapter describes in detail all CFW-08 parameters and functions.

6.1 SYMBOLS

Some symbols used in this chapter are presented below:
AIx = Analog input number x.
AO = Analog output.
DIx = Digital input number x.
F* = Frequency reference. This is the frequency value that indicates the desired motor speed at the inverter output.
F_e = Input frequency of the acceleration and deceleration ramp.
F_{max} = Maximum output frequency, defined at P134.
F_{min} = Minimum output frequency, defined at P133.
F_s = Output frequency - frequency applied to the motor.
I_{nom} = Rated inverter output current (rms), in Ampères (A). This value is defined in P295.
I_s = Inverter output current.
I_a = Active current at inverter output, i.e., it is the component of the total motor current proportional to active electric power absorbed by the motor.
RLx = Relay output number x.
U_d = DC link voltage in the DC link circuit.

6.2 INTRODUCTION

This section describes the main concepts related to the CFW-08 frequency inverter.

6.2.1 Control Modes (V/F and Vector)

As already informed in item 2.3, CFW-08 has in the same product a V/F control and a sensorless vector control (VVC: “voltage vector control”).
The user must choose one of them. Please find below a description of each control mode.

6.2.2 V/F Control

This control mode is based on the constant V/F curve (P202 = 0 - linear V/F curve). Its performance is limited at low frequencies as function of the voltage drop in the stator resistance, that causes a significant magnetic flow reduction in the motor air gap and consequently reducing the motor torque. This deficiency should be compensated by using manual and automatic boost torque (IxR compensations), that are set according to the parameters P136 or P137.

In most applications (for instance: centrifugal pumps and fans) the setting of these functions is enough to obtain the required performance. But there are applications that require a more sophisticated control. In these cases it's recommended the use of the sensorless vector control, that will be described in the item 6.2.3 - Vector Control (VVC).

In V/F control, the speed regulation, that can be obtained by setting properly slip compensation can be maintained within 1 % to 2 % of the rated speed. For instance, for a IV pole motor/60 Hz, the minimum speed variation at no load condition and at rated load can be maintained between 18 and 36 rpm.

There is still a variation of the linear V/F control: the quadratic V/F control. This control mode is suitable for applications like centrifugal pumps and fans (loads with quadratic torque x speed characteristics), since it enables a motor loss reduction, resulting in an additional energy saving by using an inverter. For more details about the V/F control mode, please refer to the description of the parameters P136, P137, P138, P142 and P145.

6.2.3 Vector Control (VVC)

In the sensorless vector control available at the CFW-08, the inverter operation is optimized for the used motor, so that a better performance in terms of torque and speed regulation is obtained. This vector control does not require a signal of the speed feedback through tachogenerator or encoder coupled on motor shaft.
To maintain the magnetic flux in the motor air gap constant, and consequently the motor torque, within the whole speed variation range (from zero up to the field weakening point), a sophisticated control algorithm is used that considers the mathematic model of the induction motor.
Thus one can maintain the magnetic flux in the motor air gap approximately constant at frequencies down to approximately 1 Hz.
In vector control mode one can obtain a speed regulation of 0.5 % (relating to the rated speed). Thus, for instance, for a IV pole motor/60 Hz one can obtain a speed variation in the range of 10 rpm.
Other advantage of the vector control is its easy setting procedure. The user needs only to enter in the parameters P399 and P407 the information about the used motor (nameplate data) and runs the self-tuning routine (by setting P408 = 1) and the inverter configures itself to the required application. So the inverter is ready to be operated in an optimized manner.
For more information, refer to the description of the parameters P178 and P399 to P409.

6.2.4 Frequency Reference Sources

The frequency reference (i.e., the desired output frequency, or alternatively, the motor speed) can be defined in several ways:

- ☑ The keypad - digital reference that can be changed through the keypad (HMI), by using the keys ▲ and ▼ (refer to the parameters P221, P222 and P121);
- ☑ Analog input - the analog input AI1 (XC1:6) or the AI2 (XC1:8) can be used, or both (refer to the parameters P221, P222 and P234 to P240);
- ☑ Multispeed - up to 8 preset digital references (refer to the parameters P221, P222 and P124 to P131);
- ☑ Electronic potentiometer (EP) - another digital reference, its value is defined by using 2 digital inputs (DI3 and DI4) - refer to the parameters P221, P222, P265 and 266;
- ☑ Via serial.

Figure 6.1 shows through a diagram block the frequency reference definition to be used by the inverter.
The block diagram in figure 6.2 shows the inverter control.

NOTE!

- ☑ AI2 is only available in CFW-08 Plus version.
- ☑ DIs ON when connected to 0V (XC1:5) with S1:1 OFF and when connected to 24 V(external) with S1:1 to ON.
- ☑ When F* < 0 one takes the module of F* and reverses the direction of rotation (if this is possible - P231 = 2 and if the selected control is not forward run/reverse run).

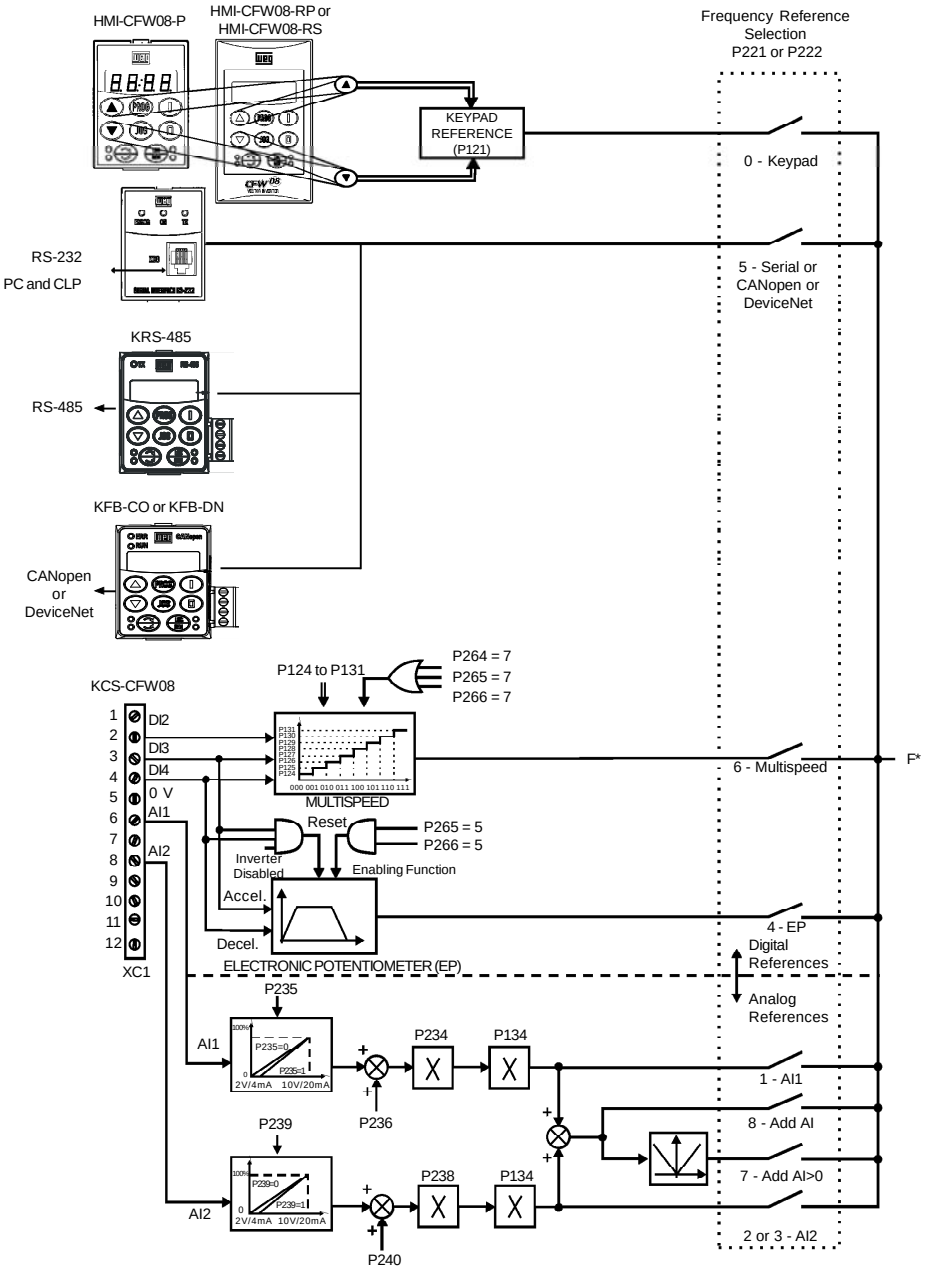

Figure 6.1 *- Block diagram of the frequency reference*

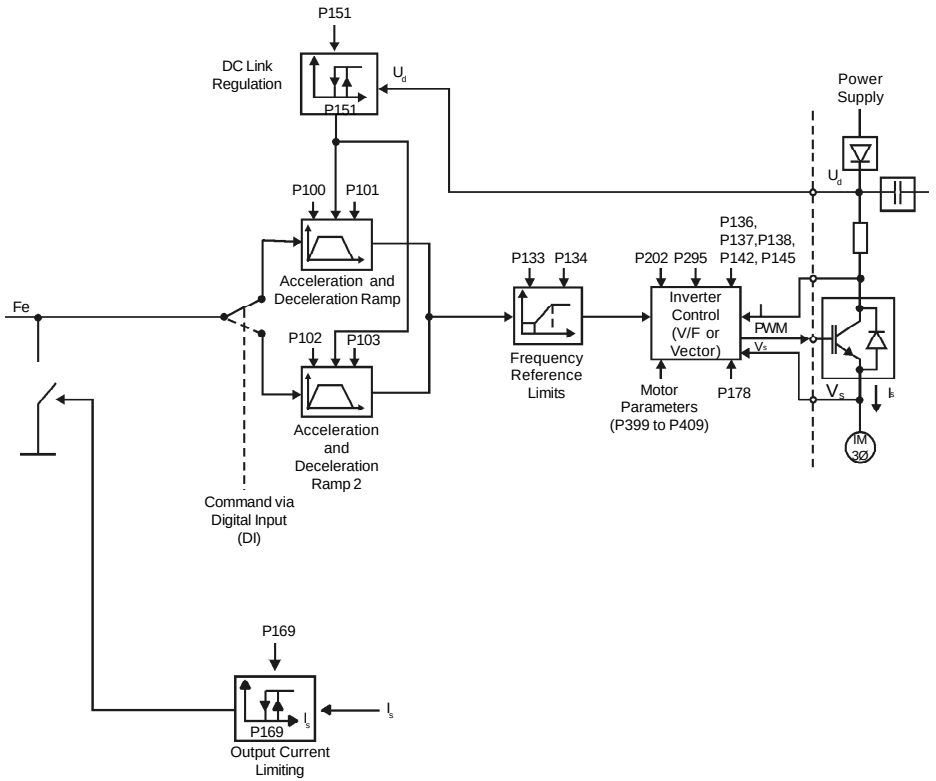

Figure 6.2 *- Block diagram of the inverter control*

NOTE!

- ☑ In V/F control mode (P202 = 0 or 1), Fe = F* (refer to figure 6.1) if P138 = 0 (slip compensation disabled). If P138 $\neq$ 0, refer to figure 6.9 for the relation between Fe and F*.
- ☑ In vector control mode (P202 = 2) always Fe = F* (refer to figure 6.1).

6.2.5 Commands

The inverter has the following commands: PWM pulse enabling/ disabling, definition of the direction of rotation and JOG.
As the frequency reference, the inverter commands can de defined in several ways.

The command sources are the following:

- ☑ Via keypad - keys I, 0, and JOG.
- ☑ Via control terminals (XC1) - digital inputs.
- ☑ Via serial interface.

The inverter enabling and disabling commands can be defined as follows:

- ☑ Via keypad I and 0 of the HMI.
- ☑ Via serial.
- ☑ Start/stop (terminals XC1 - DI(s) - refer to the parameter P263 to P266).
- ☑ General enable (terminals XC1 - DI(s) - refer to the parameter P263 to P266).
- ☑ Forward run (terminals XC1 - DI(s) - refer to the parameter P263 and P264), it also defines the diretion of rotation.
- ☑ ON/OFF (3-wire control) (terminals XC1 - DIs - refer to the parameters P263 and P264).

The definition of the direction of rotation can be defined by using:

- ☑ The key of the keypad.
- ☑ Serial.
- ☑ Digital input (DI) programmed for FWD/REV (refer to the parameter P264 to P266).
- ☑ Digital inputs programmed as FWD / REV, that defines both Inverter enabling or disabling and direction of rotation (refer to the parameters P263 and P264).
- ☑ Analog input - when the reference is via analog input and a negative offset is programmed (P236 or P240<0), the reference may assume negative values, thus reversing the direction of the motor rotation.

6.2.6 Local/Remote Operation Modes

User can define two different conditions relating to the frequency reference source and the inverter commands: these are the local and the remote operation modes.
Figure 6.3 shows the local and remote operation modes in a block diagram.
With the factory setting in local mode the inverter can be controlled by using the keypad, while in remote mode all controls are via terminals (XC1) - reference definition and inverter commands.

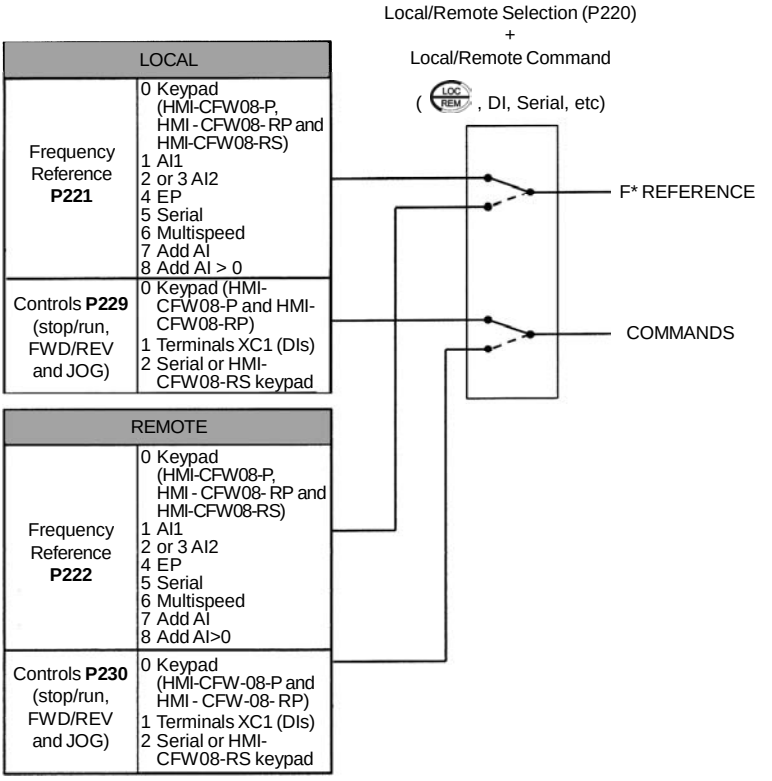

Figure 6.3 *- Block diagram of the local and remote operation mode*

6.3 PARAMETER LISTING

In order to simplify the explanation, the parameters have been grouped by characteristics and functions:

Read-only Parameters	Variables that can be viewed on the display, but can not be changed by the user
Regulation Parameters	Programmable values used by the CFW-08 functions
Configuration Parameters	They define the inverter characteristics, the functions to be executed, as well as the input/output functions of the control board
Motor Parameters	Data about the applied motor: data indicated on the motor nameplate and those obtained during the running of the self-tuning routine
Special Function Parameters	Here are included parameters related to special functions

Following notes may appear in some parameters during the detailed description:

(1) This parameter is only displayed in vector mode (P202 = 2).
(2) This parameter is only displayed in scalar mode P202 = 0 or 1.
(3) This parameter can be changed only when the inverter is disabled (stopped motor).
(4) This parameter is only available with HMI-CFW08-RS.
(5) The analog input value is represented by zero when it is not connected to an external signal. In order to use an analog input as a digital input with NPN logic (P235 or P239 = 3), it is necessary to connect a 10 kΩ resistor from terminal 7 to 6 (AI1) or 8 (AI2) of the control terminal strip.
(6) This parameter is only available in the CFW-08 Plus version.
(7) The parameter value changes automatically when P203 = 1.

6.3.1 Access and Read-only Parameters - P000 to P099

Parameter	Range [Factory Setting] Unit	Description / Notes
P000 Parameter Access	0 to 999 [0] 1	☑ Releases the access to change the parameter values. ☑ The password is 5. ☑ The use of the password is always active.
P002 Frequency Proportional Value	0 to 6553 [-] 0.01 (≤ 99.99); 0.1 (≥ 100.0); 1 (≥ 1000)	☑ Indicates the value of P208 x P005. ☑ When the vector control mode is used (P202 = 2), P002 indicates the actual motor speed in rpm. ☑ In case of different scales and units, use P208.
P003 Motor Output Current	0 to 1.5 x I_{nom} [-] 0.01 A (≤ 9.99 A); 0.1 A (≥ 10.0 A)	☑ Indicates the inverter output current in Amps (A).
P004 DC Link Voltage	0 to 862 [-] 1 V	☑ Indicates the actual DC link voltage, in volts (V).
P005 Motor Output Frequency	0.00 to 300.0 [-] 0.01 Hz (≤ 99.99 Hz); 0.1 Hz (≥ 100.0 Hz)	☑ Indicates the inverter output frequency in Hertz (Hz).
P007 Motor Output Voltage	0 to 600 [-] 1 V	☑ Indicates the inverter output rms voltage, in volts (V).

Parameter	Range [Factory Setting] Unit	Description / Notes
P008 Heatsink Temperature	25 to 110 [-] 1 °C	☑ Indicates the current power at the heatsink in Celsius degrees (°C). ☑ The inverter overtemperature protection (E04) acts when heatsink temperature reaches:

Inverter	P008 in ºC (ºF) @ E04
1.6-2.6-4.0-7.0 A/200-240 V	103 (217.4)
1.0-1.6-2.6-4.0 A/380-480 V	90 (194)
7.3-10-16 A/200-240 V	90 (194)
2.7-4.3-6.5-10 A/380-480 V	103 (217.4)
13-16 A/380-480 V	108 (226.4)
22-28-33 A/200-240 V	104 (219.2)
24-30 A/380-480 V	104 (219.2)

Table 6.1 *- Temperature to act the overtemperature protection*

P009 (1) Motor Torque	0.0 to 150.0 [-] 0.1 %	☑ Indicates the torque developed by motor in percent (%) relating to the set rated motor torque. ☑ The rated motor torque is defined by the parameters P402 (rated motor speed) and P404 (rated motor power). I.e.: $T_{nom} = 716 \cdot \frac{P_{nom}}{n_{nom}}$ where T_{nom} is given in kgf.m, P_{nom} is the rated motor power in watts - HP - (P404), and n_{nom} is the rated motor speed in rpm - P402.
P014 Last Fault	00 to 41 [-] -	☑ Indicates the code of the last occured fault. ☑ Item 7.1 shows a list of possible faults, their code numbers and possible causes.
P023 Software Version	x.yz [-] -	☑ Indicates the software version installed in the DSP memory located on the control board. ☑ Parameter P040, P203, P520 to P528 are only available from the software version V3.50 on.
P040 PID Process Variable (Value % x P528)	0 to 6553 [-] 1	☑ Indicates the value of the process variable used as PID feedback, in percent (%). ☑ The PID function is only available from the software version V3.50 on. ☑ The indication unit can be changed through P528. ☑ Refer to detailed description of the PID regulator in item 6.3.5 - Special Function Parameters.

6.3.2 Regulation Parameters - P100 to P199

Parameter	Range [Factory Setting] Unit	Description / Notes
P100 Acceleration Time	0.1 to 999 [5.0 s] 0.1s (≤ 99.9 s); 1s (≥ 100 s)	☑ This set of parameters defines the time to accelerate linearly from zero up to the rated frequency and to decelerate linearly from the rated frequency down to zero. ☑ The rated frequency is defined by parameter: - P145 in V/F control (P202 = 0 or 1). - P403 in vector control (P202 = 2). ☑ When factory setting is used, inverter always follows the time defined in P100 and P101. ☑ If ramp 2 is used, the acceleration and deceleration times follow the values programmed at P102 and P103, use a digital input. Refer to the parameters P263 to P265. ☑ Depending on the load inertia, too short acceleration times can disable the inverter due to overcurrent (E00). ☑ Depending on the load inertia, too short deceleration times can disable the inverter due to overvoltage (E01). For more details, refer to the parameter P151.
P101 Deceleration Time	0.1 to 999 [10.0 s] 0.1s (≤ 99.9 s); 1s (≥ 100 s)	
P102 Ramp 2 Acceleration Time	0.1 to 999 [5.0 s] 0.1s (≤ 99.9 s); 1s (≥ 100 s)	
P103 Ramp 2 Deceleration Time	0.1 to 999 [10.0 s] 0.1s (≤ 99.9 s); 1s (≥ 100 s)	
P104 S Ramp	0 to 2 [0] -	☑ The S ramp reduces mechanical stress during the acceleration and deceleration of the load.

P104	S Ramp
0	Inactive
1	50 %
2	100 %

***Table 6.2** - S ramp configuration*

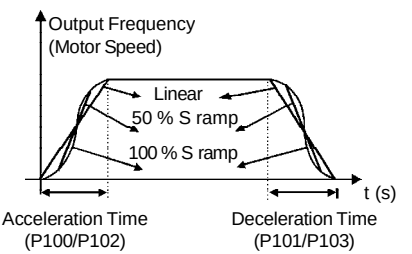

***Figure 6.4** - S or linear ramp*

☑ It is recommended to use the S ramp with digital frequency/speed references.

Parameter	Range [Factory Setting] Unit	Description / Notes
P120 Digital Reference Backup	0 to 2 [1] -	☑ It defines if the inverter should save or not the last used digital reference. This backup function is only applicable to the keypad reference (P121).

P120	Reference Backup
0	Inactive
1	Active
2	Active, but always given by P121, independently of the sorce reference

Table 6.3 - *Digital reference backup configuration*

☑ If the digital reference backup is inactive (P120 = 0), the frequency reference will be equal to the minimum frequency every time the inverter is enabled, according to P133.

☑ If P120 = 1, the inverter stores the digital reference value automatically (for either keypad, EP or serial reference source) every time the inverter is disabled, either by a disable condition (Start/Stop or General Enable), error or undervoltage.

☑ If P120 = 2, then every time the inverter is enabled its initial reference is given by the value adjusted in the parameter P120, which remains stored, regardless of the reference source.
Application example: when the reference is via EP and the inverter is disabled via the EP Deceleration digital input, its reference is reduced to 0 (zero). When P120 = 2, then at a new enabling the inverter accelerates to the value programmed in P121, not to the minimum reference.

P121 Keypad Reference	P133 to P134 [3.00 Hz] 0.01 Hz (≤ 99.99 Hz); 0.1 Hz (≥ 100.0 Hz)	☑ Allows the setting of the output frequency to the motor through ▲ and ▼ keys. ☑ This setting may also be performed while visualizing parameters P002 and P005. ☑ The keys ▲ and ▼ are enabled if P221 = 0 (in local mode) or P222 = 0 (in remote mode).The value of P121 is maintained at the last set value, even when inverter is disabled or turned OFF, provided P120 = 1 or 2 (backup active).

Parameter	Range [Factory Setting] Unit	Description / Notes
P122 JOG Speed Reference	0.00 to P134 [5.00 Hz] 0.01 Hz (≤ 99.99 Hz); 0.1 Hz (≥ 100.0 Hz)	☑ Defines the frequency reference (speed) for the JOG function. The JOG function can be activated in several ways:

The JOG key of the HMI-CFW08-P	P229 = 0 (local mode) or P230 = 0 (remote mode)
The JOG key of the HMI-CFW08-RS	P229 = 2 (local mode) or P230 = 2 (remote mode)
DI3	P265 = 3 and P229 = 1 (local) or P230 = 1 (remote)
DI4	P266 = 3 and P229 = 1 (local) or P230 = 1 (remote)
DI5	Adjustment switch S1.3 set to Off; P235 = 2 or P235 = 3 or P235 = 4; P229 = 1 or P230 = 1 and P267 = 3
DI6	Adjustment switch S1.4 set to Off; P239 = 2 or P239 = 3 or P239 = 4; P229 = 1 or P230 = 1 and P268 = 3
Serial	P229 = 2 (local mode) or P230 = 2 (remote mode)

Table 6.4 - *JOG reference configuration*

☑ To operate JOG function works, the inverter must be disabled by ramp (stopped motor). Thus if the control source is via terminal, there must be at least one digital input programmed as start/stop enabling (otherwise E24 will be displayed), which must be OFF to enable the JOG function via digital input.

☑ The direction of rotation is defined by parameter P231.

P124
Multispeed Reference 1

P133 to P134
[3.00 Hz]
0.01 Hz
(≤ 99.99 Hz);
0.1 Hz
(≥ 100.0 Hz)

P125
Multispeed Reference 2

P133 to P134
[10.00 Hz]
0.01 Hz
(≤ 99.99 Hz);
0.1 Hz
(≥ 100.0 Hz)

P126
Multispeed Reference 3

P133 to P134
[20.00 Hz]
0.01 Hz
(≤ 99.99 Hz);
0.1 Hz
(≥ 100.0 Hz)

☑ Multispeed is used when the selection of a number up to 8 pre-programmed speeds is desired.

☑ It allows the control of the output speed by relating the values programmed by the parameters P124 to P131, according to the logical combination of the digital inputs programmed for multispeed.

☑ Activation of the multispeed function:
- Ensure that the reference source is given by the multispeed function, i.e., set P221 = 6 in local mode or P222 = 6 in remote mode;
- Program one or more digital inputs to multispeed, according to table below:

DI	Programming
DI2	P264 = 7
DI3	P265 = 7
DI4	P266 = 7
DI5	P267 = 7

Note: Digital inputs DI2 and DI5 shall not be set for multispeed function simultaneously. In case it happens, the frequency inverter will indicate an E24 error (programming error).

Table 6.5 *- Parameters setting for defining the multispeed function through digital inputs*

Parameter	Range [Factory Setting] Unit	Description / Notes
P127 Multispeed Reference 4	P133 to P134 [30.00 Hz] 0.01 Hz (≤ 99.99 Hz); 0.1 Hz (≥ 100.0 Hz)	☑ The frequency reference is defined by the status of the digital inputs programmed to multispeed as shown in table below:
P128 Multispeed Reference 5	P133 to P134 [40.00 Hz] 0.01 Hz (≤ 99.99 Hz); 0.1 Hz (≥ 100.0 Hz)	
P129 Multispeed Reference 6	P133 to P134 [50.00 Hz] 0.01 Hz (≤ 99.99 Hz); 0.1 Hz (≥ 100.0 Hz)	☑ The multispeed function has some advantages for the stability of the fixed preprogrammed references and the immunity against electrical noises (digital references and insulated digital inputs).
P130 Multispeed Reference 7	P133 to P134 [60.00 Hz] 0.01 Hz (≤ 99.99 Hz); 0.1 Hz (≥ 100.0 Hz)	
P131 Multispeed Reference 8	P133 to P134 [66.00 Hz] 0.01 Hz (≤ 99.99 Hz); 0.1 Hz (≥ 100.0 Hz)	

	8 speeds		
	4 speeds		
		2 speeds	
DI2 or DI5	**DI3**	**DI4**	**Freq. Reference**
Open	Open	Open	P124
Open	Open	0 V	P125
Open	0 V	Open	P126
Open	0 V	0 V	P127
0 V	Open	Open	P128
0 V	Open	0 V	P129
0 V	0 V	Open	P130
0 V	0 V	0 V	P131

Table 6.6 *- Frequency reference*

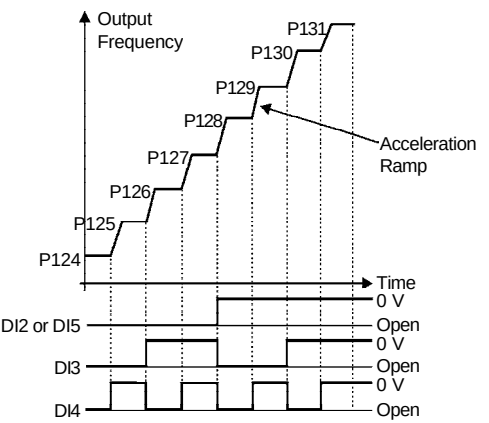

Figure 6.5 *- Time diagram of the multispeed function*

P133 Minimum Frequency (F_{min})	0.00 to P134 [3.00 Hz] 0.01 Hz (≤ 99.99 Hz); 0.1 Hz (≥ 100.0 Hz)	☑ Defines the maximum and minimum output frequency (motor) when inverter is enabled. ☑ It is valid for any type of speed reference excepting JOG. ☑ The parameter P133 defines a dead zone when analog inputs are used - refer to the parameter P233 to P240.

Parameter	Range [Factory Setting] Unit	Description/Notes
P134 Maximum Frequency (F_{max})	P133 to 300.0 [66.00 Hz] 0.01 Hz (≤ 99.99 Hz); 0.1 Hz (≥ 100.0 Hz)	☑ P134 and the gain and offset of the analog input(s) (P234, P236, P238 and P240) defines the scale and the range of the speed variation via analog input(s). For more details refer to the parameter P234 to P240.
P136 (2) Manual Torque Boost (IxR Compensation)	0.0 to 30.0 [5.0 % for 1.6-2.6-4.0-7.0 A/ 200-240 V and 1.0-1.6-2.6-4.0 A/ 380-480 V; 2.0 % for 7.3-10-16 A/ 200-240 V and 2.7-4.3-6.5-10 A/ 380-480 V; 1.0 % for 22-28-33 A/ 200-240 V and 13-16-24-30 A/ 380-480 V] 0.1 %	☑ Compensates the voltage drop due to the motor stator resistance. It acts at low speeds by increasing the inverter output voltage, in order to maintain a constant torque during the V/F operation. ☑ The best setting is to program the lowest value for P136 that still permits the motor start satisfactorily. If the value is higher than required, an inverter overcurrent (E00 or E05) may occur due to high motor currents at low speeds.

a) P202 = 0

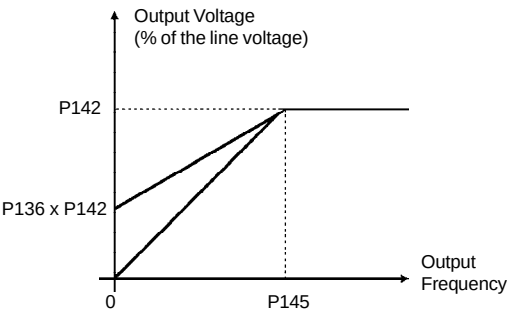

b) P202 = 1

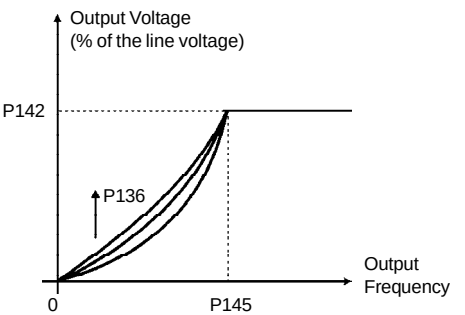

Figure 6.6 a) and b) *- V/F curve and details of the manual torque boost (IxR compensation)*

Parameter	Range [Factory Setting] Unit	Description / Notes
P137 (2) Automatic Torque Boost (Automatic IxR Compensation)	0.00 to 1.00 [0.00] -	☑ The automatic torque boost compensates for the voltage drop in the stator resistance in function of the active motor current. ☑ The criteria for setting P137 are the same of the parameter P136. 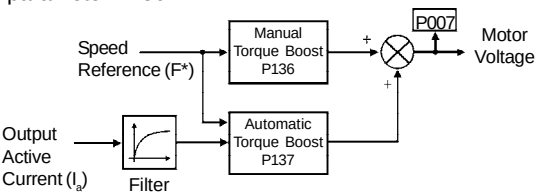 ***Figure 6.7*** *- Block diagram of the automatic torque boost function* 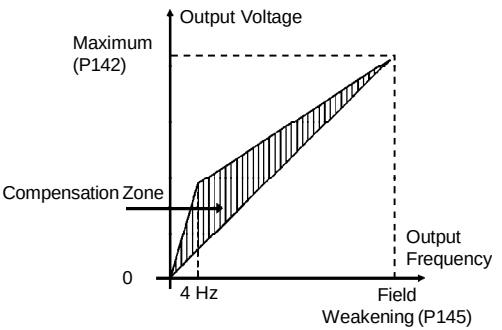 ***Figure 6.8*** *- V/F curve with automatic torque boost (automatic IxR compensation)*
P138 (2) Slip Compensation	0.0 to 10.0 [0.0] 0.1 %	☑ The parameter P138 is used in the motor slip compensation function. ☑ This function compensates the drop of the motor speed due to load, which is a inherent characteristic relating to the operation principle of the induction motor. ☑ This speed drop is compensated by increasing the output frequency (and voltage) (applied to the motor) as a function of the increase of the active motor current, as shown in the block diagram and in the V/F curve below. 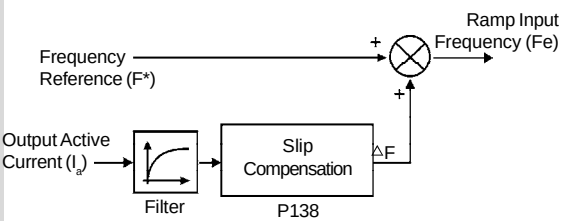 ***Figure 6.9*** *- Block diagram of the slip compensation function*

Parameter	Range [Factory Setting] Unit	Description / Notes
		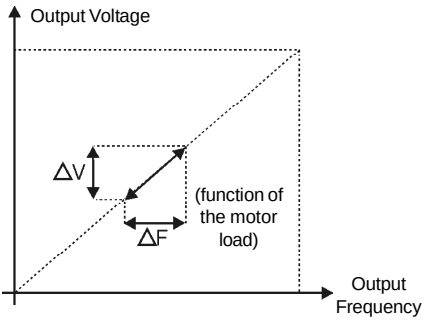 ***Figure 6.10 -*** *V/F curve with slip compensation* ☑ To set the parameter P138 use the following procedure: - Run the motor without load up to approximately half of the application top speed. - Measure the actual motor or equipment speed. - Apply rated load to equipment. - Increase parameter P138 until the speed reaches its no-load speed.
P142 (2) (3) Maximum Output Voltage **P145** (2) (3) Field Weakening Frequency (F_{nom})	0 to 100 [100 %] 1 % P133 to P134 [50.00 Hz or 60.00 Hz depending on the market] 0.01 Hz (≤ 99.99 Hz); 0.1 Hz (≥ 100.0 Hz)	☑ Define the V/F curve used in V/F control (P202 = 0 or 1). ☑ These parameters allow changing the standard V/F curve defined at P202 - Control Mode. ☑ P142 sets the maximum output voltage. This value is set as a percent of the inverter supply voltage. ☑ Parameter P145 defines the rated frequency of the motor used. ☑ The V/F curve relates the inverter output voltage and frequency (applied to the motor) and consequently the magnetizing flux of the motor. ☑ The programmable V/F curve can be used in special applications where the motors used require a rated voltage and/or frequency different than the standard ones. Examples: motor for 220 V/400 Hz and a motor for 200 V/60 Hz. ☑ Parameter P142 is also useful in appplications that require motor rated voltage different from the inverter supply voltage. Example: 440 V line and 380 V motor.

Parameter	Range [Factory Setting] Unit	Description / Notes
		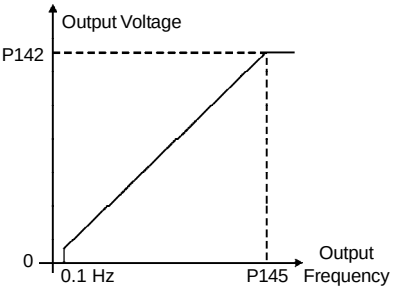 ***Figure 6.11*** *- Adjustable V/F curve*
P151 DC Link Voltage Regulation Level	325 to 410 (line 200-240 V) [380 V] 1 V 564 to 820 (line 380-480 V) [780 V] 1 V	☑ The DC link voltage regulation (ramp holding) avoids overvoltage trips (E01) during deceleration of high inertia loads and/or short deceleration times. ☑ It acts in order to increase the deceleration time (according to load - inertia), thus avoiding the E01 activation. 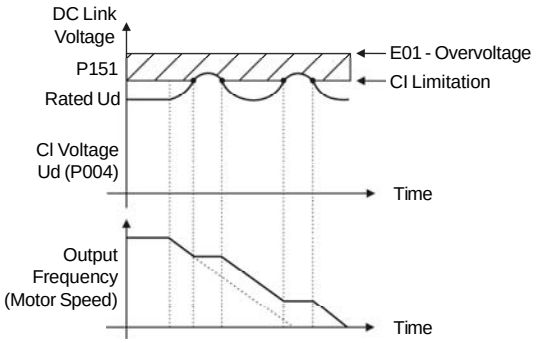 ***Figure 6.12*** *- Deceleration curve with DC Link voltage limitation (regulation)* ☑ By this function an optimized deceleration time (minimum) is achieved for the driven load. ☑ This function is useful in applications with medium inertia that require short deceleration times. ☑ In case of overvoltage trip (E01) during the decelearation, you must reduce gradually the value of P151 or increase the time of the deceleration ramp (P101 and/or P103). ☑ The motor will not stop if the line is permanently with overvoltage (U_d > P151). In this case, reduce the line voltage or increase the value of P151.

Parameter	Range [Factory Setting] Unit	Description / Notes
		☑ If even with these settings the motor does not decelerate within the required time, you will have the following alternatives - Use the dynamic braking (for more details, refer to the item 8.23). - If inverter is being operated in V/F control, increase P136. - If inverter is being operated in vector control, increase P178. ☛ **NOTE!** When dynamic braking is used, set P151 to the maximum value.
P156 Motor Overload Current	$0.2xI_{nom}$ to $1.3xI_{nom}$ [1.2xP401] 0.01 A (≤ 9.99 A); 0.1 A (≥ 10.0 A)	☑ This function is used to protect the motor against overload (Ixt function - E05). ☑ The motor overload current is the current level above which the in verter will consider the motor operating under overload. The higher the difference between the motor current and the overload current, the sooner the Ixt function - E05 will act. 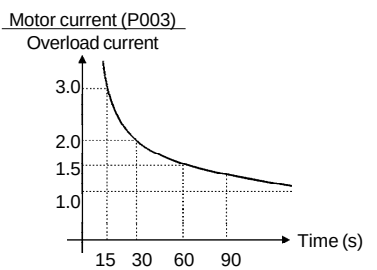 ***Figure 6.13*** *- Ixt function – overload detection* ☑ Parameter P156 must be set from 10 % to 20 % higher than the rated motor current (P401). ☑ Always P401 is changed, P156 is adjusted automatically.

Parameter	Range [Factory Setting] Unit	Description / Notes
P169 Maximum Output Current	$0.2xI_{nom}$ to $2.0xI_{nom}$ [1.5 x P295] 0.01 A (≤ 9.99 A); 0.1 A (≥ 10.0 A)	☑ Prevents motor stalling during an overload. If motor load increases its current will increase too. If the motor current attempts to exceed the value set at P169, the motor speed will be decreased by following the deceleration ramp until the current becomes lower than P169. As soon as the overload condition disappears, the motor speed is resumed. 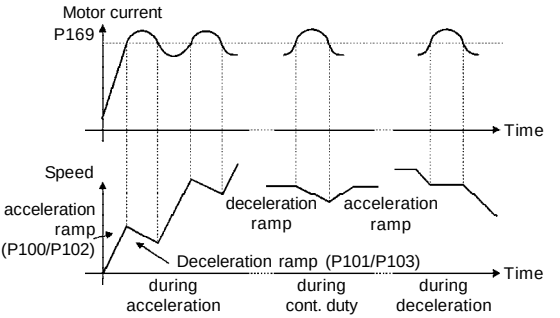 ***Figure 6.14*** *- Curves showing the actuation of the current limitation* ☑ The current limitation function is disabled when P169 > 1.5 x P295.
P178 (1) Rated Flux	50.0 to 150 [100 %] 0.1 % (≤ 99.9 %); 1 % (≥ 100 %)	☑ Defines the flux in the motor air gap, when in vector control. It is expressed as a percentage (%) of the nominal flux. ☑ Generally it is not necessary to change P178 of the default value (100 %). But in some specific cases, different values at P178 may be set.These conditions may be: - To increase the inverter torque capacity (P178 > 100 %). Examples: 1) to increase the motor starting torque and thus ensure faster motor starts; 2) to increase the inverter braking torque and thus allow faster stops, without using dynamic braking. - To reduce the inverter energy consumption (P178 < 100 %).

6.3.3 Configuration Parameters - P200 to P398

Parameter	Range [Factory Setting] Unit	Description / Notes
P202 (3) Control Mode	0 to 2 [0] -	☑ Defines the inverter control mode. Item 5.3 gives some guidelines relating to the selection of control mode.

P202	Control Mode
0	Linear V/F Control (scalar)
1	Quadratic V/F Control (scalar)
2	Sensorless Vector Control

Table 6.7 *- Adjustment for each control mode*

As shown in table above, there are 2 V/F control modes and one vector control mode.

Scalar control modes:

☑ Linear V/F control: this control mode ensures a flux in the motor air gap approximately constant from around 3 Hz up to the field weakening (defined by the parameters P142 and P145).
Thus in this speed range, an approximately constant torque capacity is obtained. This control mode is recommended for belt conveyors, extruding machines, etc.

☑ Quadratic V/F control: in this control mode the flux in the motor air gap is proportional to the output frequency up to the field weakening point (defined at P142 and P145). Thus the torque capacity is a quadratic function of the speed. The main advantage of this type of control is the energy saving capability with variable torque loads, due to the reduction of the motor losses (mainly due to motor iron losses and magnetic losses).
Main application fields for this type of control are: centrifugal pumps, fans, multimotor drivings.

a) Linear V/F

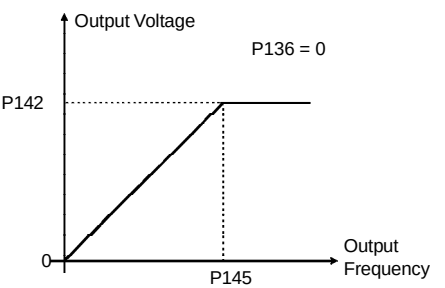

Figure 6.15 a) *- V/F control modes (scalar)*

Parameter	Range [Factory Setting] Unit	Description / Notes
		b) Quadratic V/F

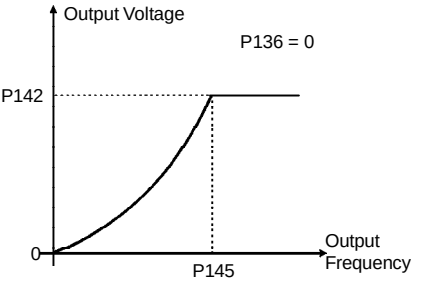

Figure 6.15 b) *-V/F control modes (scalar)*

Vector control modes:

☑ The vector control allows a better performance regarding to torque and speed control. The CFW-08 vector control operates without motor speed sensor (sensorless). It must be applied when following performances are required:
- Better dynamics (faster accelerations and stoppings).
- When more accurate speed control is required.
- When high torques at low speeds are required (≤ 5 Hz). Examples: in positioning, such as load moving, packing machines, dosing machines, etc.

☑ The vector control can not be used in multimotor applications.

☑ The performance of the vector control with a switching frequency of 10 kHz is not so good as when a switching frequency of 5 kHz or 2.5 kHz is used. It is not possible to use a vector control with a switching frequency of 15 kHz.

☑ For more details about the vector control, refer to item 6.2.3.

P203 (3)
Special Function Selection

0 or 1
[0]
-

☑ Selects or not the special function of the PID Regulator.

P203	Special Function
0	None
1	PID Regulator

Table 6.8 *- Configuration of P203 for using or not the special function PID Regulator*

☑ Refer to detailed description of PID Regulator parameters (P520 to P528).

☑ When P203 is changed to 1, P265 is changed automatically to 15 (DI3 = manual/automatic).

Parameter	Range [Factory Setting] Unit	Description / Notes
P204 (3) Load Factory Setting	0 to 5 [0] -	☑ Programs all parameters to the standard factory default, when P204 = 5. ☑ The parameters P142 (maximum output voltage), P145 (field weakening frequency), P295 (rated current), P308 (inverter address) and P399 to P407 (motor parameters) are not changed when the factory default parameters are loaded through P204 = 5. ☑ When P204 is set to 5 with the version "A2" of the control board, it is necessary to set P234 and P238 to 2 as well as P236 and P240 to -50 % so that the analog inputs can be bipolar (-10 to +10) Vdc.
P205 Display Default Selection	0 to 6 [2] -	☑ Selects which of the parameters listed below will be shown on the display as a default after the inverter has been powered up.
P206 Auto-Reset Time	0 to 255 [0] 1 s	☑ In the event of a fault trip, except for E14, E24 and E41, the inverter can initiate an automatic reset after the time given by P206 is elapsed. ☑ If P206 ≤ 2 auto-reset does not occur. ☑ If after auto-reset the same fault is repeated three times consecutively, the auto-reset function will be disabled. A fault is considered consecutive if it happens again within 30 seconds after the auto-reset. Thus if a fault occurrs four times consecutively, this fault remains indicated permanently (and inverter disabled).
P208 Reference Scale Factor	0.00 to 99.9 [1.00] 0.01 (≤ 9.99) 0.1 (≥ 10.0)	☑ It allows that the read-only parameter P002 indicates the motor speed in value, for instance, rpm. ☑ The indication of P002 is equal to the output frequency value (P005) multiplied by the value of P208, i.e., P002 = P208 x P005. ☑ If desired, the conversion from Hz to rpm is made as a function of the pole number:

P205	Read Parameter
0	P005 [Output Frequency (Motor)]
1	P003 [Output Current (Motor)]
2	P002 (Value Proportional to Frequency)
3	P007 [Output Voltage (Motor)]
4 and 5	Not Used
6	P040 (PID Process Variable)

Table 6.9 *- Configuration of P205*

Parameter	Range [Factory Setting] Unit	Description / Notes

Motor Pole Number	P208 to P002 Indicate the Speed in rpm
II poles	60
IV poles	30
VI poles	20

Table 6.10 *- Configuration of P208 so P002 indicates the motor speed in rpm*

☑ Always when programmed to vector mode (P202 = 2), the parameter P208 is set according to the value of P402 (motor speed) to indicate the speed in rpm, in P002.

P212 Frequency to Enable the Sleep Mode	0.00 to P134 [0.00] 0.01 Hz (≤ 99.99 Hz) 0.1 Hz (≥ 100.0 Hz)	☑ The purpose of the sleep function is to identify an operation point where the inverter does not interfere with the system in which it is inserted, so that it can be switched off. However, the inverter status in the internal variables and via serial interface remains as enabled, even though there are no PWM pulses at the inverter output. ☑ The parameter P212 defines a frequency value at the ramp input (FE) below which the inverter is able to enter the “Sleep Mode”. ☑ The “Sleep Mode” disables the inverter when the frequency reference is lower than the P212 value. If this conditions is reverted, i.e., if the frequency rises above P212, the inverter is automatically enabled again. ☑ Besides P212, the “Sleep Mode” depends also of the parameters P213 and P535. ☑ When the “Sleep Mode” is active the CFW08 indicates “Srdy” on the HMI.
P213 Time Delay to Activate the Sleep Mode	0.1 to 999 [2.0] 0.1 s (≤ 99.9 s) 1 s (≥ 100 s)	The parameter P213 sets the interval while the “Sleep Mode” conditions defined by P212 and P535 must remain unchanged. This avoids that disturbances and momentary oscillations activate the “Sleep Mode” improperly.

Parameter	Range [Factory Setting] Unit	Description / Notes
P215 (3) (4) Keypad Copy Function	0 to 2 [0] -	☑ The keypad copy function is used to transfer the content of the parameters from one inverter to another.

P215	Action	Notes
0	No Function	-
1	Copy (inverter→ keypad)	Transfers the current parameter values of the inverter to non volatile memory (EEPROM) of the HMI-CFW08-RS keypad. The current inverter parameters are not changed
2	Paste (keypad → inverter)	Transfers the content of the non volatile memory of the HMI-CFW08-RS keypad (EEPROM) to the current inverter parameters

Table 6.11 *- Programming P215 for Copy function execution*

☑ Procedure is as follows:

1. Connect the keypad (HMI-CFW08-RS) to the inverter from which the parameters will be copied (inverter A - source inverter).
2. Set P215 = 1 (copy) to transfer the parameter values from the inverter A to the keypad. Press PROG key. During running of the Copy function, display will show COPY . P215 resets automatically to 0 (Off) after transfer has been completed.
3. Disconnect the keypad from the inverter (A).
4. Connect the same keypad to the inverter to which the parameters will be transferred (inverter B - target inverter).
5. Set P215 = 2 (paste) to transfer the content of the non volatile memory of the keypad (EEPROM - has the inverter A parameters) to inverter B. Press the PROG key. While the keypad is running the paste function, the display shows PASt, an abbreviation for paste. When P215 returns to 0, the parameter transfer has been concluded. Now inverters A and B will have the same parameter values.

Parameter	Range [Factory Setting] Unit	Description / Notes
		Please consider still the following: - If the inverters A and B are driving different motors, check the motor parameters (P399 to P409) related to inverter B. - To copy the parameter content of the inverter A to other inverter(s), repeat steps 4 and 5 above. 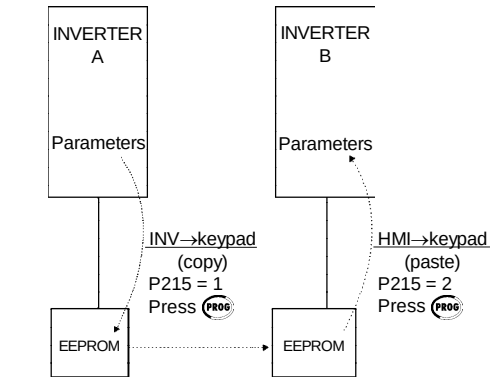 ***Figure 6.16*** *- Coping the parameters from the inverter A to the inverter B, by using the Copy function and the HMI-CFW08-RS keypad* ☑ While the keypad (HMI) is running the Copy function (read or write procedures), you can not operate it. ☛ **NOTE!** The copy function is only available when the inverters are of the same model (voltage and current) and when compatible software versions are installed. The sofware version is considered compatible when the digits x and y (Vx.yz) are equal. If they are different, E10 will be displayed and the parameters will not be loaded to the destination inverter.
P219 (3) Switching Frequency Reduction Point	0.00 to 25.00 [6.00 Hz] 0.01 Hz	☑ Defines the point where the switching frequency is modified automatically to 2.5 kHz. ☑ This improves considerably the measurement of the output current at low frequencies, and consequently improves the inverter performance, mainly when in vector control mode. ☑ This parameter value is zero in the models 28 A and 33 A/ 200 V and 24 A and 30 A/380-480 V, because in these

Parameter	Range [Factory Setting] Unit	Description / Notes

models the switching frequency reduction at low speed for maintaining the performance is not required. This is possible because the output current acquisition circuit is different in these models.

☑ It is recommended to set P219 according to the switching frequency as shown below:

P297 (F_{sw})	Recommended P219
4 (5 kHz)	6.00 Hz
6 (10 kHz)	12.00 Hz
7 (15 kHz)	18.00 Hz

Table 6.12 *- Recommended values for P219*

☑ In application where it is not possible to operate the inverter at 2.5 kHz (for instance, due to acoustic noise), set P219 = 0.00.

P220 (3)
Local/Remote Selection Source

0 to 6
[2]
-

☑ Defines the source of the Local/Remote selection.

P220	Local/Remote Selection	Default Mode (*)
0	Always local mode	-
1	Always remote mode	-
2	Key LOC/REM of the keypad (HMI-CFW08-P or HMI-CFW08-RP)	Local
3	Key LOC/REM of the keypad (HMI-CFW08-P or HMI-CFW08-RP)	Remote
4	DI2 to DI4	-
5	Key LOC/REM of the keypad (HMI-CFW08-RS) or serial interface	Local
6	Key LOC/REM of the keypad (HMI-CFW08-RS) or serial interface	Remote

(*) When inverter is powered up (initialization).

Table 6.13 *- Configuration of P220 for defining where the Local/ Remote selection is made*

☑ In the factory default setting, the inverter is started in local mode and the key LOC/REM of the HMI-CFW08-P keypad will select the local/remote mode.

☑ The inverters with dummy panel (without HMI-CFW08-P keypad) are factory supplied with P220 = 3.

☑ For more details, refer to item 6.2.6.

Parameter	Range [Factory Setting] Unit	Description / Notes
P221 (3) Frequency Local Reference Selection **P222** (3) Frequency Remote Reference Selection	0 to 8 [0] - 0 to 8 [1] -	☑ Defines the frequency reference selection in the Local and Remote mode.

P221/P222	Reference Source
0	Keys ▲ and ▼ of the HMIs (P121)
1	Analog input AI1' (P234, P235 and P236)
2 or 3	Analog input AI2' (P238, P239 and P240)
4	Electronic potentiometer (EP)
5	Serial
6	Multispeed (P124 to P131)
7	Sum of the analog inputs (AI1'+AI2') ≥ 0 (negative values are zeroed)
8	Sum of the analog inputs (AI1'+AI2')

Table 6.14 *- Programming P221 (local mode) or P222 (remote mode) for speed reference selection*

☑ The AI1' term is the AI1 analog input value after gain and offset have been applied.
☑ For factory default setting, the local reference is via the ▲ and ▼ keys of the keypad and the remote reference is via analog input AI1.
☑ The reference value set by the ▲ and ▼ keys is contained in parameter P121.
☑ For details of the Electronic Potentiometer (EP) operation, refer to figure 6.20.
☑ When option 4 (EP) is selected, set P265 and P266 to 5.
☑ When option 6 (multispeed) is selected, set P264 and/ or P265 and/or P266 to 7.
☑ For more details, refer to items 6.2.4 and 6.2.6.

P229 (3) Local Command Selection **P230** (3) Remote Command Selection	0 to 2 [0] - 0 to 2 [1] -	☑ Define the control sources for the inverter enabling and disabling FWD/REV and JOG.

P229/P230	Control Source
0	HMI-CFW08-P or HMI-CFW08-RP Keypad
1	Terminals (XC1)
2	HMI-CFW08-RS keypad or serial interface

Table 6.15 *- Programming P229 and P230 for origin selection of the inverter commands*

☑ The direction of rotation is the only operation control that depends on other parameter for operation refer to the parameter P231.
☑ For more details, refer to items 6.2.4, 6.2.5 and 6.2.6.

Parameter	Range [Factory Setting] Unit	Description / Notes
P231 (3) Forward/Reverse Selection - Local and Remote	0 to 3 [2] -	☑ Defines the direction of rotation.

P231	Direction of Rotation
0	Always forward
1	Always reverse
2	Commands as defined in P229 and P230
3	DIx

Table 6.16 *- Programming P231 for direction of rotation selection*

☑ When P231 = 3, the DIx programmed for speed direction in P264, P265, P266, P267 or P268 defines the Forward speed direction when Inactive, and Reverse when Active. This speed direction definition prevails over any other that may be programmed in the inverter. Opposite to the option P231 = 2, which depends on the local or remote situation.

P233 Analog Input Dead Zone	0 or 1 [1] -	☑ The dead zone removal function is helpful when the user whishes to operate with only a restricted range of values, without losing the analog input resolution.

☑ This parameter works only for analog inputs (AIx) programmed for frequency reference.

☑ It defines whether the analog input dead zone is: Inactive = 0 or Active = 1.

☑ If P233 = 0 (Inactive), the signal at the analog inputs acts on the frequency reference starting from the minimum frequency programmed at P133, up to the maximum frequency programmed at P134, by changing the signal from 0 V/0 mA/4 mA to 10 V/20 mA, according to the figure 6.17.

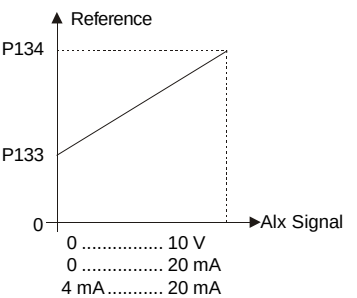

Figure 6.17 - *Analog input response with Inactive (P233 = 0) Dead Zone*

If P233 = 1 (Active), the signal at the analog inputs has a dead zone where the frequency reference remains at the minimum reference value (P133), even with the variation of the input signal, according to the figure 6.18.

Parameter	Range [Factory Setting] Unit	Description / Notes

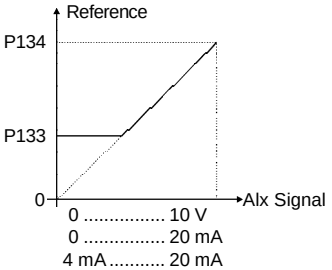

Figure 6.18 - *Analog input response with Active (P233 = 1) Dead Zone*

P234
Analog Input AI1 Gain

0.00 to 9.99
[1.00]
0.01

☑ The analog inputs AI1 and AI2 define the inverter frequency reference as shown in the curves presented in the parameter P233 (figure 6.17 and figure 6.18).

☑ The internal value AIx' that defines the frequency reference to be used by the inverter, is given as percent of the full scale reading and is obtained by using one of the following equations (refer to the parameters P235 and P239):

P235/P239	Signal	Equation
0	0 to 10 V	$AIx' = GAIN \cdot \frac{AIx}{10} + \frac{OFFSET}{100}$
0	0 to 20 mA	$AIx' = GAIN \cdot \frac{AIx}{20} + \frac{OFFSET}{100}$
1	4 to 20 mA	$AIx' = GAIN \cdot \frac{AIx - 4}{16} + \frac{OFFSET}{100}$

Table 6.17 *- Definition of the analog input signal AI1 (P235) and AI2 (P239)*

where:
- x = 1, 2.
- AIx is given in V or mA, according to the used signal (refer to the parameters P235 and P239).
- GAIN is defined by the parameters P234 and P238 for AI1 and AI2 respectively.
- OFFSET is defined by the parameters P236 and P240 for AI1 and AI2 respectively.

☑ This is shown in the figure 6.19.

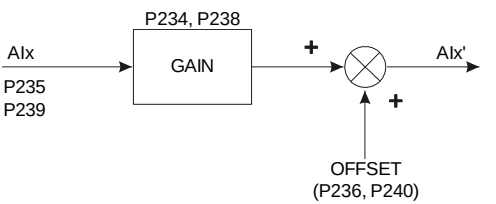

Figure 6.19 *- Block diagram of the analog inputs AI1 and AI2*

Parameter	Range [Factory Setting] Unit	Description / Notes

☑ As an example, refer to the following situation: AI1 is set to voltage input (0 to 10 V) – P235 = 0, AI1 = 5 V, P234 = 1.00 and P236 = -70 %. Thus:

$$AI1' = 1 \cdot \frac{5}{10} + \frac{(-70)}{100} = -0.2 = -20\ \%$$

The motor will run in reverse direction of rotation as defined by the commands (negative value) - if this is possible (P231 = 2), with a module reference equal to 0.2 or 20 % of the maximum output frequency (P134). I.e., if P134 = 66.00 Hz, then the frequency reference is equal to 13.2 Hz.

☑ The following configurations are available for the version "A2" of the control board:

P234/P238	P236/P240	Analog Input Signal
2.00	-100 %	(-10 to +10) V

P235 (3) (5)
Analog Input AI1 Function

0 to 5
[0]
(0 to 10) V/
(0 to 20) mA
-

☑ Defines the type of the signal of the analog input, as shown in table below:

P235/P239	Type/Signal Excursion	
0	(0 to 10) V or (0 to 20) mA or (-10 to +10) V	
1	(4 to 20) mA	
2	$DI_{5,6}$ – PNP	Active if $AI_{1,2} > 7$ V Inactive if $AI_{1,2} < 3$ V
3	$DI_{5,6}$ – NPN	Active if $AI_{1,2} < 3$ V Inactive if $AI_{1,2} > 7$ V
4	$DI_{5,6}$ – TTL	Active if $AI_{1,2} > 2.0$ V Inactive if $AI_{1,2} < 0.8$ V
5	PTC	

Table 6.18 *- Signal definition of analog inputs AI1 (P235) and AI2 (P239)*

☑ When current signals are used, change the switch position S1:3 and/or S1:4 to ON.

☑ In the functions 2, 3 and 4 in P235 or P239, the analog function AIx leaves this function and operates as a digital input NPN (active with low level) or as a digital input PNP (active with high level) or as a digital input with levels TTL.

☑ The inverter displays E24 when the signal AIx (P235 or P239) has been configured as digital input and AIx is at the same time an analog reference (P221/P222).

Parameter	Range [Factory Setting] Unit	Description / Notes
		☑ To use the bipolar option (-10 to +10) V with the version "A2" of the control board (refer to item 2.4) the following settings are needed: - P234 = 2 and P236 = -50 - using AI1 - P238 = 2 and P240 = -50 - using AI2 ☑ In the option 5 in P235 or P239, the AIx can detect an overtemperature fault (E32), through the motor PTC detector. For this, the AIx must be configured to current input, i. e., the DIP switch S1:3 or SI:4 must be set to ON. The figure 6.20 shows how to make the PTC connection to the inverter. ☑ The two PTC inputs operate independently. 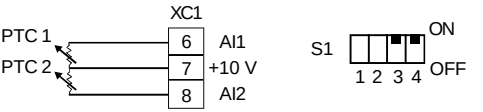 ***Figure 6.20*** *- PTC connection to the inverter through the XC1 connector*
P236 Analog Input AI1 Offset	-999 to +999 [0.0] 0.1 % (≤ 99.9 %); 1 % (≥ 100 %)	☑ Refer to description of P234
P238 (6) Analog Input AI2 Gain	0.00 to 9.99 [1.00] 0.01	☑ Refer to description of P234
P239 (3)(5)(6) Analog Input AI2 Function	0 to 5 [0] (0 to 10) V/ (0 to 20) mA	☑ Refer to description of P235
P240 (6) Analog Input AI2 Offset	-999 to +999 [0.0] 0.1 % (≤ 99.9 %); 1 % (≥ 100 %)	☑ Refer to description of P234
P248 Analog Inputs Filter Time Constant	0 to 200 [10 ms] 1 ms	☑ It configures the time constant of the analog inputs filter between 0 (without filtering) and 200 ms. ☑ Thus the analog input will have a response time equal to three time constants. For instance, if the time constant is 200 ms, and a step is applied to the analog input, the response will be stabilized after 600 ms.

Parameter	Range [Factory Setting] Unit	Description / Notes
P251 (6) Analog Output AO Function	0 to 9 [0] -	☑ P251 defines the variable to be indicated at the analog ouput according to the following table:

P251	AO Function
0	Output frequency (Fs) - P005
1	Frequency reference or input frequency (Fe)
2	Output current - P003
3, 5 and 8	No function
4	Torque - P009
6	PID Process variable - P040
7	Active current
9	PID Setpoint

Table 6.19 *- Configuration of P251*

NOTE!
- Option 4 is only available in the vector control mode.
- Options 6 and 9 are only available from software version V3.50 on.

☑ For factory setting, AO = 10 V when the output frequency is equal to the maximum frequency (defined by P134), i.e., equal to 66 Hz.

☑ Indication scale at the analog outputs (full scale = 10 V):

Variable	Full Scale
Frequency (P251 = 0 or 1)	P134
Current (P251 = 2 or 7)	1.5 x I_{nom}
Torque (P251 = 4)	150 %
Process Variable - PID (P251 = 6)	P528
PID Setpoint (P251 = 9)	P528

Table 6.20 *- Full scale for possible variables that can be represented by the AO*

P253 Analog Output AO Signal	0 or 1 [0] -	☑ Defines the analog output signal, as shown in table below:

P253	Type/Signal Excursion
0	(0 to 10) V or (0 to 20) mA
1	(4 to 20) mA

Table 6.21 *- Configuration of P253 to the signal type of the analog output AO*

☑ When current signal is used, change the position of the switches S1:2 to OFF.

Parameter	Range [Factory Setting] Unit	Description / Notes
P263 (3) Digital Input DI1 Function	0 to 14 [0] -	☑ Check possible options in the table below and details about the operation of the functions in the figure 6.21. Function description:
P264 (3) Digital Input DI2 Function	0 to 14 [0] -	☑ **Not used or general enable:** P263 = 0 When the command source is the terminals, i. e., if P229 = 1 for the local mode or P230 = 1 for the remote mode, the digital input DI1 operates as general enable. Otherwise, no function is attributed to the input DI1
P265 (3) (7) Digital Input DI3 Function	0 to 16 [10] -	☑ **Not used or start/stop:** P265, P266, P267 or P268 = 8. If the inverter is operating in local mode and P229 = 1, the digital input DI3/DI4/DI5/DI6 operates as start/stop.
P266 (3) Digital Input DI4 Function	0 to 16 [8] -	If the inverter is operating in remote mode and P230 = 1, the digital input DI3/DI4/DI5/DI6 operates as start/stop. Otherwise no function is associated to the inputs DI3/ DI4/DI5/DI6.
P267 (3) (5) Function of the Digital Input DI5	0 to 16 [11] -	☑ **Multispeed:** P264, P265, P266 or P267 = 7. You must program P221 and/or P222 = 6. ☑ **Multispeed with ramp 2** and **FWD/REV with ramp 2:**
P268 (3) (5) (6) Function of the Digital Input DI6	0 to 16 [11] -	If different acceleration and deceleration times are desired for a determined operation condition (for instance, for a frequency set or for a direction of rotation), please check if it is possible to use the multispeed functions with ramp 2 and the FWD/REV with ramp 2. ☑ **Accelerates EP** and **Decelerates EP** (EP – Electronic Potentiometer): P265 = P266 = 5 or P267 = P268 = 5. You must program P221 and/or P222 = 4. ☑ **Local/Remote** Open/0 V at the respective digital input. ☑ **Disable Flying Start:** Refer to the comments in the parameters P310 and P311. ☑ **Manual/Automatic:** Details about this function can be found in the item 6.3.5 Special Function Parameters.

Parameter	Range [Factory Setting] Unit	Description / Notes

Function \ DI Parameter	DI1 (P263)	DI2 (P264)	DI3 (P265)	DI4 (P266)	DI5 (P267)	DI6 (P268)
General Enable	1 to 7 and 10 to 12	-	2	2	2	2
Start/Stop	9	-	9	9	9	9
No Function and General Enable	0	-	-	-	-	-
No Function or Start/Stop	-	-	8	8	8	8
FWD	8	-	-	-	-	-
REV	-	8	-	-	-	-
FWD with Ramp 2	13	-	-	-	-	-
REV with Ramp 2	-	13	-	-	-	-
ON	14	-	-	-	-	-
OFF	-	14	-	-	-	-
Multispeed	-	7	7	7	7	-
Multispeed with Ramp 2	-	-	14	-	-	-
Increase E.P.	-	-	5	-	5	-
Decrease E.P.	-	-	-	5	-	5
FWD/REV	-	0	0	0	0	0
Local/Remote	-	1	1	1	1	1
JOG	-	-	3	3	3	3
No External Fault	-	-	4	4	4	4
Ramp 2	-	-	6	6	6	6
Reset	-	-	10	10	10	10
Disable Flying Start	-	-	13	13	13	13
Manual/Automatic (PID)	-	-	15	-	-	-
Not Used	-	2 to 6 and 9 to 12	11 and 12	11, 12, 14 and 15	11, 12, 14 and 15	7, 11, 12, 14 and 15
Increase E.P. with Ramp 2	-	-	16	-	16	-
Decrease E.P. with Ramp 2	-	-	-	16	-	16

Table 6.22 *- Programming the DI's functions*

NOTE!
Functions are activated with 0 V at the digital input when S1:1 is OFF.
Functions are activated with 24 V at the digital input when S1:1 is ON.

The charts below give provide actuation and operating description of the digital input functions.

a) GENERAL ENABLE

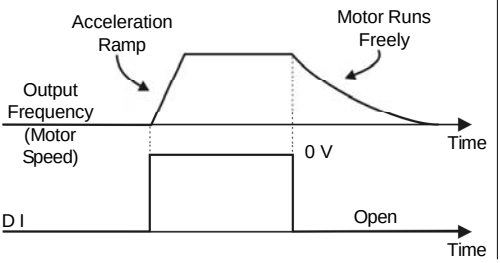

b) START/STOP

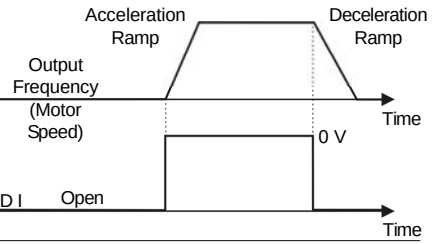

c) START/STOP

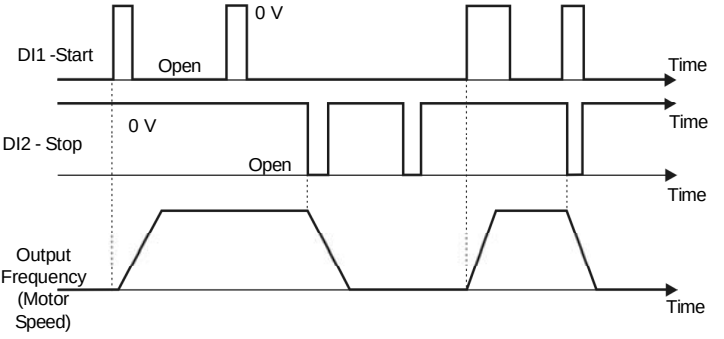

d) FORWARD / REVERSE

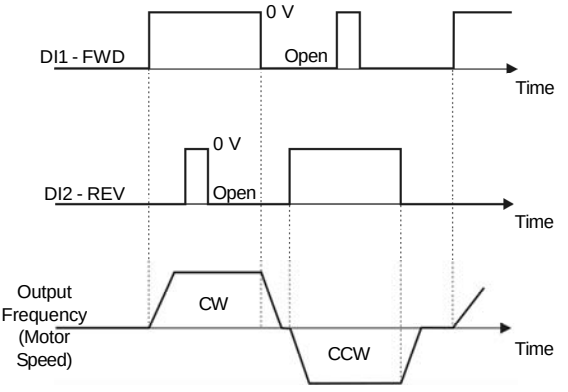

Figure 6.21 a) to d) *- Time diagrams of the digital input functions*

e) ELECTRONIC POTENTIOMETER (EP)

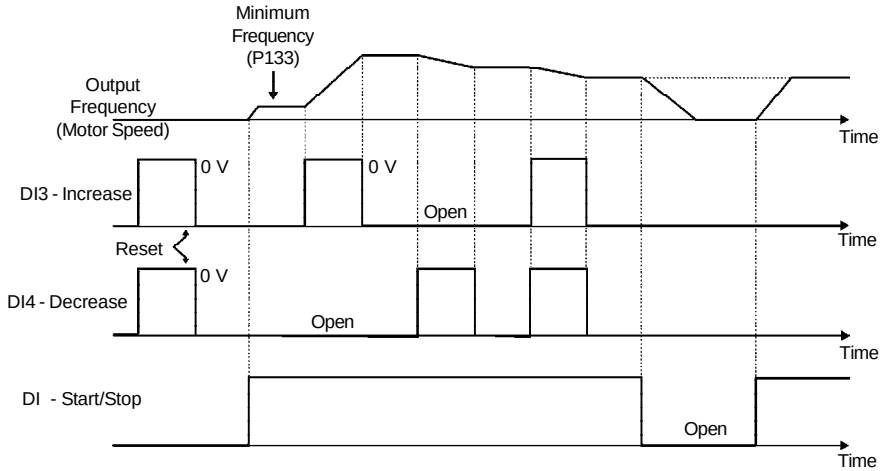

f) FWD/REV

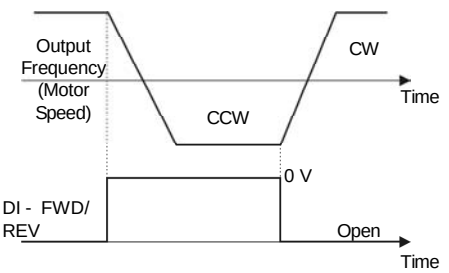

g) RAMP 2

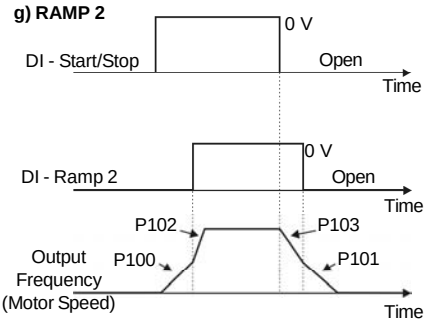

h) JOG

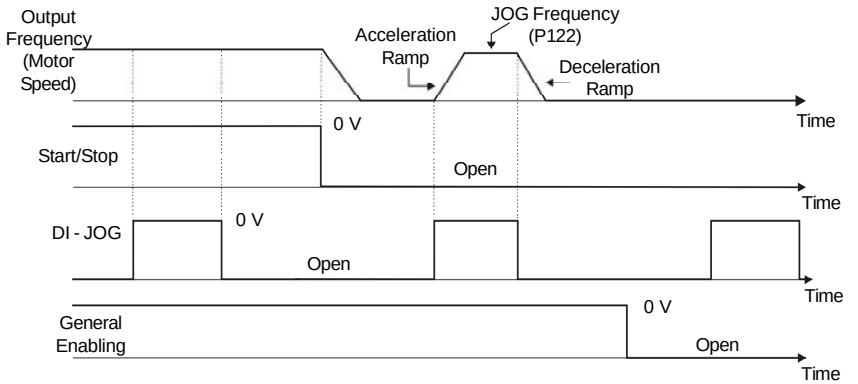

Figure 6.21 (cont.) e) to h) *- Time diagrams of the digital input functions*

i) NO EXTERNAL FAULT

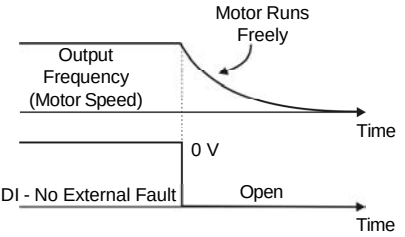

j) FLYING START DISABLE

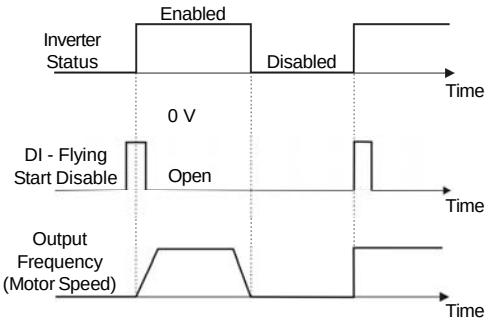

k) RESET

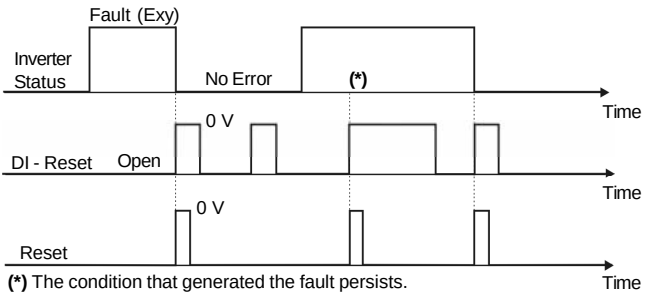

Figure 6.21 (cont.) i) to k) *- Time diagrams of the digital input functions*

Parameter	Range [Factory Setting] Unit	Description / Notes
P277 (3) Relay Output RL1 Function	0 to 7 [7] -	☑ Check possible options on table below.
P279 (3) (6) Relay Output RL2 Function	0 to 7 [0] -	

Output/Parameter / Function	P277 (RL1)	P279 (RL2)
Fs > Fx	0	0
Fe > Fx	1	1
Fs = Fe	2	2
Is > Ix	3	3
Not used	4 and 6	4 and 6
Run (inverter enabled)	5	5
No fault	7	7

Table 6.23 *- Functions of the relay outputs*

☑ Notes about the functions of the relay outputs:

1) When the definition in the function name is true, the digital output will be activated, i.e., the relay coil is energized.

2) When the option 'Not used' has been programmed, the relay output(s) will be disabled, i.e., the coil is not energized.

3) CFW-08 Plus has 2 relay outputs (1 NO and 1 NC contact). It is possible to emulate a reversal contact relay by setting P277 = P279.

☑ Definitions of the symbols used in the functions:

- **Fs** = P005 - Motor Output Frequency
- **Fe** = Frequency Reference (ramp input frequency)
- **Fx** = P288 - Fx Frequency
- **Is** = P003 - Motor Output Current
- **Ix** = P290 - Ix Current

The charts below give provide actuation and operating description of the relay output:

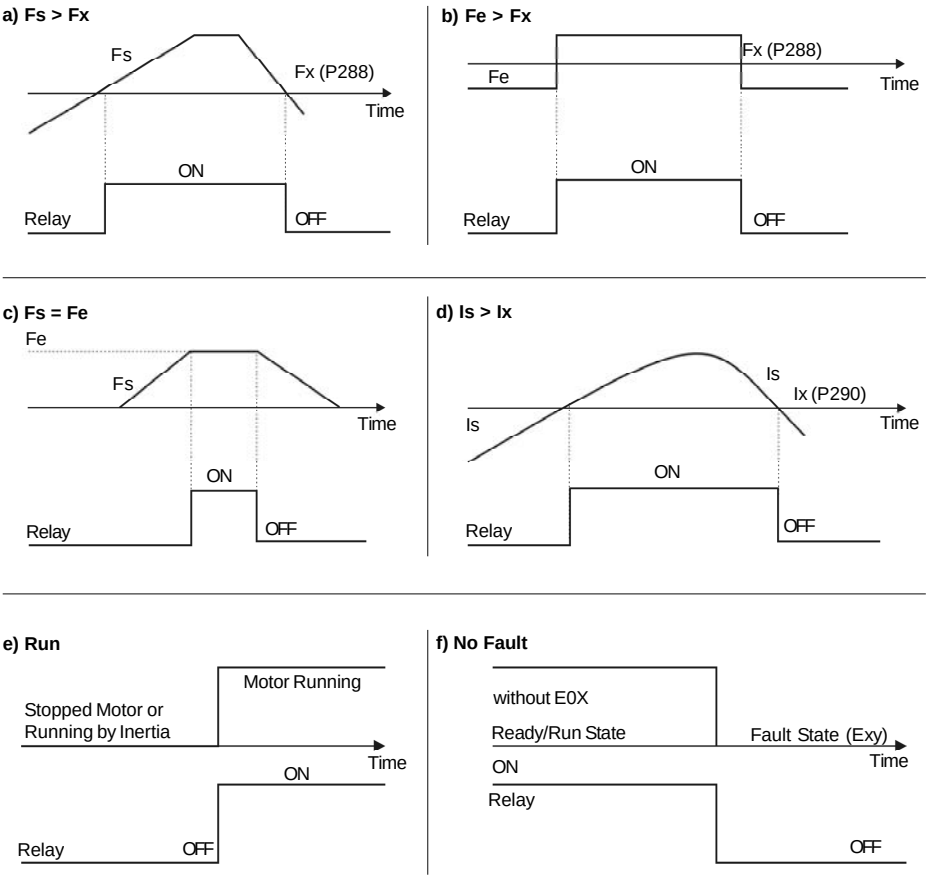

Figure 6.22 a) to f) *- Details about the operation of the digital relay output functions*

Parameter	Range [Factory Setting] Unit	Description / Notes
P288 Fx Frequency	0.00 to P134 [3.00 Hz] 0.01 Hz (≤ 99.99 Hz); 0.1 Hz (≥ 100.0 Hz)	☑ Used in the relay output functions Fs > Fx, Fe > Fx and Is > Ix (refer to the parameters P277 and P279).
P290 Ix Current	0 to 1.5xI_{nom} [1.0xI_{nom}] 0.01 A (≤ 9.99 A); 0.1 A (≥ 10.0 A)	
P295 (3) Rated Inverter Current (I_{nom})	300 to 316 [According to the rated inverter current (I_{nom})] -	☑ The rated inverter current can be programmed according to the table below.

P295	Rated Inverter Current (I_{nom})
300	1.0 A
301	1.6 A
302	2.6 A
303	2.7 A
304	4.0 A
305	4.3 A
306	6.5 A
307	7.0 A
308	7.3 A
309	10 A
310	13 A
311	16 A
312	22 A
313	24 A
314	28 A
315	30 A
316	33 A

Table 6.24 *- Definition of the rated inverter current*

P297 (3) Switching Frequency	4 to 7 [4] kHz	☑ Defines the switching frequency of the IGBTs in the inverter.

P297	Switching Frequency (f_{sw})
4	5 kHz
5	2.5 kHz
6	10 kHz
7	15 kHz

Table 6.25 *- Definition of the switching frequency*

☑ The switching frequency is a compromise between the motor acoustic noise level and the inverters IGBTs losses. Higher switching frequencies cause lower motor acoustic noise level, but increase the IGBTs losses, increasing the

Parameter	Range [Factory Setting] Unit	Description / Notes

drive components temperature and thus reducing their useful life.

- ☑ The predominant frequency on the motor is twice the switching frequency set at P297.
- ☑ Thus, P297 = 4 (5 kHz) results in an audible motor noise corresponding to 10 kHz. This is due to the used PWM technique .
- ☑ The reduction of the switching frequency also contributes to the reduction of instability and ressonance that may occur in certain application conditions, as well as reduces the emission of electromagnetic energy by the inverter.
- ☑ The reduction of the switching frequencies also reduces the leakage currents to ground, which may avoid the nuisance activation of the ground fault protection (E00).
- ☑ The option 15 kHz (P297 = 7) is not available in vector control mode or when the external serial keypad (HMI-CFW-08-RS) is used.
- ☑ Use currents according to table below:

Inverter Model	2.5 kHz (P297 = 5)	5 kHz (P297 = 4)	10 kHz (P297 = 6)	15 kHz (P297 = 7)
CFW080016S2024 ...	1.6 A	1.6 A	1.6 A	1.6 A
CFW080016B2024 ...	1.6 A	1.6 A	1.6 A	1.6 A
CFW080026S2024 ...	2.6 A	2.6 A	2.6 A	2.1 A
CFW080026B2024 ...	2.6 A	2.6 A	2.6 A	2.6 A
CFW080040S2024 ...	4.0 A	4.0 A	4.0 A	3.4 A
CFW080040B2024 ...	4.0 A	4.0 A	4.0 A	4.0 A
CFW080070T2024 ...	7.0 A	7.0 A	7.0 A	6.3 A
CFW080073B2024 ...	7.3 A	7.3 A	7.3 A	7.3 A
CFW080100B2024 ...	10 A	10 A	10 A	10 A
CFW080160T2024 ...	16 A	16 A	14 A	12 A
CFW080220T2024...	22 A	22 A	18 A	15 A
CFW080280T2024...	28 A	28 A	22 A	18 A
CFW080330T2024...	33 A	33 A	25 A	21 A
CFW080010T3848 ...	1.0 A	1.0 A	1.0 A	1.0 A
CFW080016T3848 ...	1.6 A	1.6 A	1.6 A	1.6 A
CFW080026T3848 ...	2.6 A	2.6 A	2.6 A	2.3 A
CFW080027T3848 ...	2.7 A	2.7 A	2.7 A	2.7 A
CFW080040T3848 ...	4.0 A	4.0 A	3.6 A	2.8 A
CFW080043T3848 ...	4.3 A	4.3 A	3.9 A	3.0 A
CFW080065T3848 ...	6.5 A	6.5 A	6.5 A	6.3 A
CFW080100T3848 ...	10 A	10 A	8.4 A	6.4 A
CFW080130T3848 ...	13 A	13 A	11 A	9 A
CFW080160T3848 ...	16 A	16 A	12 A	10 A
CFW080240T3848...	24 A	24 A	15 A	12 A
CFW080300T3848...	30 A	30 A	16 A	13 A

Table 6.26 *- Current values for P297*

Parameter	Range [Factory Setting] Unit	Description / Notes
P300 DC Braking Time	0.0 to 15.0 [0.0] 0.1 s	☑ The DC braking feature provides a motor fast stop via DC current injection. ☑ The applied DC braking current, that is proportional to the braking torque, is set at P302, and is adjusted as a percentage (%) relating to the rated inverter current. ☑ The figures below show the DC braking operation at the two possible conditions: ramp disabling and general disabling.
P301 DC Braking Start Frequency	0.00 to 15.00 [1.00 Hz] 0.01 Hz	
P302 DC Braking Current	0.0 to 130 [0.0 %] 0.1 %	

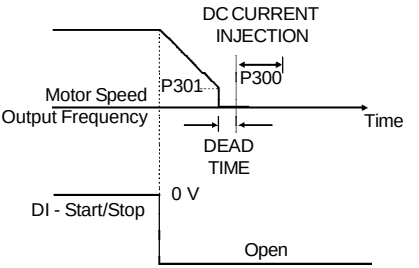

Figure 6.23 *- DC braking after ramp disabling*

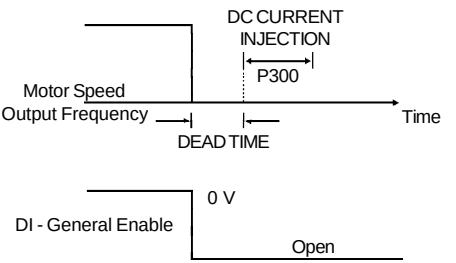

Figure 6.24 *- DC braking after general disabling*

☑ Before DC braking starts, there is a "dead time" (motor runs freely) required for the motor demagnetization. This time is function of the motor speed at which the DC braking occurs.

☑ During the DC braking the LED display flashes:

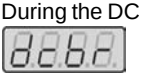

☑ If the inverter is enabled during the braking process, this process will be aborted and motor operates normally.

☑ DC braking can continue its braking process even after the motor has stopped. Pay special attention to the dimensioning of the motor thermal protection for cyclic braking of short times.

Parameter	Range [Factory Setting] Unit	Description / Notes
		☑ In applications where the motor current is lower than the rated inverter current, and where the braking torque is not enough for the braking condition, please contact WEG to optimize the settings.
P303 Skip Frequency 1	P133 to P134 [20.00 Hz] 0.01 Hz (≤ 99.99 Hz); 0.1 Hz (≥ 100.0 Hz)	☑ This feature (skip frequencies) prevents the motor from operating permanently at speeds where the mechanical system enters into resonance, causing high vibration or noise levels. ☑ The enabling of this function is performed by setting P306 ≠ 0.00.
P304 Skip Frequency 2	P133 to P134 [30.00 Hz] 0.01 Hz (≤ 99.99 Hz); 0.1 Hz (≥ 100.0 Hz)	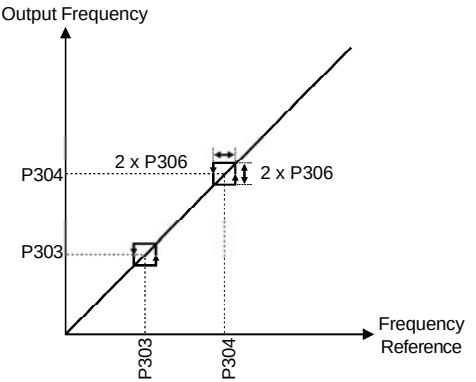 ***Figure 6.25*** *- Skip frequency curves*
P306 Skip Band Range	0.00 to 25.00 [0.00] 0.01 Hz	☑ The passage through the skip frequency band (2xP306) uses the programmed acceleration/deceleration ramps. ☑ This function does not work properly if two skip frequencies overlap.
P308 (3) Inverter Address	1 to 30 (WEG Protocol) 1 to 247 (Modbus-RTU) [1] 1	☑ Sets the address of the inverter for the serial communication. ☑ Maximum allowable value for WEG serial protocol is 30 and maximum allowable value for Modbus-RTU protocol is 247. ☑ For more details about the Serial communication refer to the item 8.24 and 8.25. ☑ The serial interface is an optional inverter accessory. Refer to the items 8.11, 8.12 and 8.16 for detailed information.

Parameter	Range [Factory Setting] Unit	Description / Notes
P310 (3) Flying Start and Ride-Through	0 to 3 [0] -	☑ The parameter P310 selects the active function(s):
P311 Voltage Ramp	0.1 to 10.0 [5.0 s] 0.1 s	☑ Parameter P311 sets the time required for the motor restart, both for Flying Start function and the Ride-Through function. In other words, it defines the time to set the output voltage starting from 0 V and up to reaching the rated voltage.

P310	Flying Start	Ride-Through
0	Inactive	Inactive
1	Active	Inactive
2	Active	Active
3	Inactive	Active

Table 6.27 *- Activation of the function Flying Start and Ride-Through by the parameter P310*

☑ **Operation of the Flying Start function:**

- It allows the motor to start when it is running. This functions acts only when the inverter is enabled. During the start, the inverter will impose the speed reference, creating a voltage ramp with time defined at P311.
- The motor can be started in conventional form, even when the Flying Start has been selected (P310 = 1 or 2), adjusting one of the digital inputs (DI3 or DI4) to 13 (Flying Start disable) and driving it (0 V) during the motor start.

☑ **Ride-Through operation:**

- Permits the inverter recovery, without disabling by E02 (undervoltage), when a momentary voltage drop in the line occurs.
  The inverter will be disabled only by E02, if the voltage drop is longer than 2.0 s.
- When the Ride-Through function is enabled (P310 = 2 or 3) and if a voltage drop in the line occurs, so the link circuit voltage becomes lower than the permitted undervoltage level, the output pulses will be disabled (motor runs freely) and the inverter waits up to 2 s for the line re-establishment. If the line returns to its normal status within this time, the inverter will enable again the PWM pulses, imposing the frequency reference instantaneously and providing a voltage ramp with time defined at P311.
- There is a dead time before this voltage ramp is started, required for the motor demagnetization. This time is proportional to the output frequency (motor speed).

Parameter	Range [Factory Setting] Unit	Description / Notes

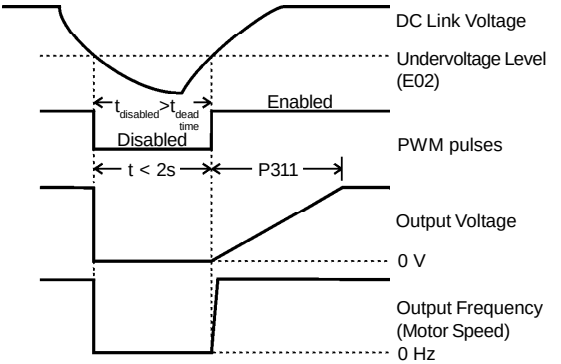

Figure 6.26 *- Ride-Through actuation*

P312 (3)
Serial Interface Protocol

0 to 9
[0 - WEG]
1

- ☑ It sets the type of the protocol for the serial communication.
- ☑ The serial interface can be configured for two distinct protocols: WEG and Modbus-RTU.
- ☑ The WEG protocol is described in item 8.24 and is selected by setting P312 = 0.
- ☑ The Modbus-RTU protocol, described in item 8.25 has nine predefined formats, as shown in table below:

P312	Rate (bps)	Parity
1	9600	-
2	9600	Odd
3	9600	Even
4	19200	-
5	19200	Odd
6	19200	Even
7	38400	-
8	38400	Odd
9	38400	Even

Table 6.28 *- P312 configuration for Modbus-RTU protocol formats*

P313
Serial Interface Watchdog Action

0 to 3
[2]
1

- ☑ It determines the type of action performed by the Watchdog.
- ☑ If the inverter does not receive any valid message (via serial interface) during the interval programmed at P314, the action set at P313 will be performed and error E28 is shown on the display.
- ☑ The different actions are:

P313	Action
0	Disables inverter via deceleration ramp
1	Triggers the general disable command of the inverter
2	Indicates only E28
3	Changes the command reference to local mode

Table 6.29 *- Configuration of P313 to Watchdog actions*

Parameter	Range [Factory Setting] Unit	Description / Notes
		☑ If the communication is re-established, E28 switches off and the inverter does not change its status.
P314 Serial Interface Watchdog Timeout	0.0 to 99.9 [0.0] 0.1 s	☑ Actuation interval of the Serial Watchdog. If the value of P314 is equal to 0, the Serial Watchdog function is disabled. Otherwise, if the inverter does not receive any valid message during this interval, it assumes the action that has been programmed at P313.

6.3.4 Motor Parameters - P399 to P499

P399 (1) (3) Rated Motor Efficiency	50.0 to 99.9 [according to the inverter model] 0.1 %	☑ Set this parameter according to motor nameplate. ☑ If this data are not available: - If the rated motor power factor is known (cos ∅ = P407), determine the efficiency by the following equation: $P399 = \eta_{nom} = 433 \times \frac{P}{V \times I \times \cos\varnothing}$ Where: - **P** is the motor power in (HP) (to convert HP to W multiply by 750, i. e., 1 HP=750 W). - **V** is the rated motor line voltage in Volts (V) – P400 - **I** is the rated motor current in Amperes (A) – P401 - For an approximation, use the values of the table in item 9.3 of this manual. ☑ It is used only in Vector Control mode.
P400 (1) (3) Rated Motor Voltage	0 to 600 [according to the inverter model and market] 1 V	☑ Rated motor voltage indicated on the motor nameplate. It is the rms-value of the motor line voltage. ☑ Set this parameter according to the motor nameplate data and the connection diagram in the terminal box. ☑ This parameter is used only in Vector Control mode.
P401 Rated Motor Current	0.3xP295 to 1.3xP295 [according to the inverter model] 0.01 A (≤ 9.99 A); 0.1 A (≥ 10.0 A)	☑ Rated motor current indicated on the motor nameplate. It is the rms-value of the rated motor line current. ☑ Set this parameter according to the motor nameplate data and the connection diagram in the terminal box. ☑ This parameter is used in V/F control [slip compensation function and automatic torque boost function (automatic IxR)] and vector control.

Parameter	Range [Factory Setting] Unit	Description / Notes
P402 (1) Rated Motor Speed	0 to 9999 [according to the inverter model] 1 rpm	☑ Set this parameter according to the motor nameplate data. ☑ This parameter is used only in Vector Control mode.
P403 (1) (3) Rated Motor Frequency	0.00 to P134 [50.00 Hz or 60.00 Hz depending on the market] 0.01 Hz (≤ 99.99 Hz); 0.1 Hz (≥ 100.0 Hz)	☑ Set this parameter according to the motor nameplate data. ☑ This parameter is used only in Vector Control mode.
P404 (1) (3) Rated Motor Power	0 to 17 [According to the inverter model] -	☑ Set this parameter according to motor nameplate, as shown in table below.

P404	Rated Motor Power		
	CV	HP	kW
0	0.16	0.16	0.12
1	0.25	0.25	0.18
2	0.33	0.33	0.25
3	0.5	0.5	0.37
4	0.75	0.75	0.55
5	1	1	0.75
6	1.5	1.5	1.1
7	2	2	1.5
8	3	3	2.2
9	4	4	3.0
10	5	5	3.7
11	5.5	5.5	4.0
12	6	6	4.5
13	7.5	7.5	5.5
14	10	10	7.5
15	12.5	12.5	9.2
16	15	15	11.2
17	20	20	15

Table 6.30 *- Configuration of the value of P404 according to the rated motor power*

☑ This parameter is used only in Vector Control mode.

Parameter	Range [Factory Setting] Unit	Description / Notes
P407 (3) Rated Motor Power Factor	0.50 to 0.99 [According to the inverter model] 0.01	☑ Set this parameter according to motor nameplate. ☑ If this value is not available: - If the rated motor efficiency is known (η_{nom} = P399), obtain the power factor through the following equation: $P407 = \cos\varnothing = 433 \times \frac{P}{V \times I \times \eta_{nom}}$ Where: - **P** is the motor power in (HP) (to convert HP to W multiply by 750, i. e., 1 HP = 750 W). - **V** is the rated motor line voltage in Volts (V) – P400 - **I** is the rated motor current in Amperes (A) – P401 - For an approximation, use the values of the table in item 9.3 of this manual. ☑ This parameter is used in V/F control [slip compensation function and automatic torque boost function (automatic IxR)] and vector control.
P408 (1) (3) Run Self-Tuning	0 or 1 [0] -	☑ Through this parameter you can run the self-tuning routine, where the stator resistance of the used motor is estimated automaticaly by the inverter. ☑ The motor will not run. ☑ By setting P408 = 1, the self-tuning routine is started. During the running of the self-tuning routine, the display flashes AUtO. ☑ If the interruption of the self-tuning routine is desired, press 0. ☑ If the estimated value of the motor stator resistance is too high for the applied inverter (examples: motor is not connected or motor is too small for the inverter) the inverter displays E14. You can only exit from this condition by switching off the inverter.
P409 (3) Motor Stator Resistance	0.00 to 99.99 [According to the inverter model] 0.01 Ω	☑ Value estimated by the self-tuning routine. ☑ The table in item 9.3 shows the stator resistance for standard, IV pole, 60 Hz, 220/380 V motors. ☑ The value of the stator resistance can also be entered at P409 directly, if this value is known. **NOTE!** P409 shall contain the equivalent value of the stator resistance of one phase, by supposing that the motor is star connected (Y). **NOTE!** If the value of P409 is too high for the motor, a disabling of the inverter can occur due to overcurrent (E00).

6.3.5 Special Function Parameters - P500 to P599

6.3.5.1 Introduction

- ☑ CFW-08 is fitted with the PID regulator that can be used for closed loop process control. This function acts as a proportional, integral and derivative regulator, superimposed on the normal inverter speed control.

- ☑ The speed will be changed in order to maintain the process variable (the variable that should be controlled - for instance: water level of a container) at the desired value, set in the setpoint.

- ☑ This regulator can, for instance, control the flow in a piping system. The setpoint (flow) can be given by the analog input AI2 or through P525 (digital setpoint), and the flow feedback signal is given at analog input AI1.

- ☑ Other application examples: level control, temperature control, dosing control, etc.

6.3.5.2 Description

- ☑ Figure 6.27 shows the block diagram of the PID regulator.
- ☑ The feedback signal must be sent to the analog input AI1.
- ☑ The setpoint is the value of the process variable at which the operation is desired. This value is entered as a percentage and is defined by the following equation:

$$\text{setpoint (\%)} = \frac{\text{setpoint (UP)}}{\text{full scale of the used sensor (UP)}} \times \text{P234} \times 100\ \%$$

Both the setpoint and the full scale value of the sensor are given by the process unit (°C, bar, etc.).
Example: a pressure transducer (sensor) with output 4 - 20 mA and full scale of 25bar (i.e., 4 mA = 0 bar and 20 mA = 25 bar) and P234 = 2.00. If the control of 10bar is desired, you should enter the following setpoint:

$$\text{setpoint (\%)} = \frac{10}{25} \times 2 \times 100\ \% = 80\ \%$$

- ☑ The setpoint can be defined via:
  - Keypad: digital setpoint, parameter P525.
  - Analog input AI2 (only available in the CFW-08 Plus): the percentage value is determined by considering P238, P239 and P240 (refer to description of these parameters).

- ☑ The parameter P040 indicates the value of the process variable (feedback) in the scale selected at P528, that is set according to the following equation:

$$P528 = \frac{\text{full scale value of the used sensor}}{P234}$$

  Example: consider the data of the last example (pressure sensor of 0-25bar and P234 = 2.00) . P528 must be set to 25/2 = 12.5.

- ☑ The parameter P040 can be selected as the display default parameter P205 = 6.

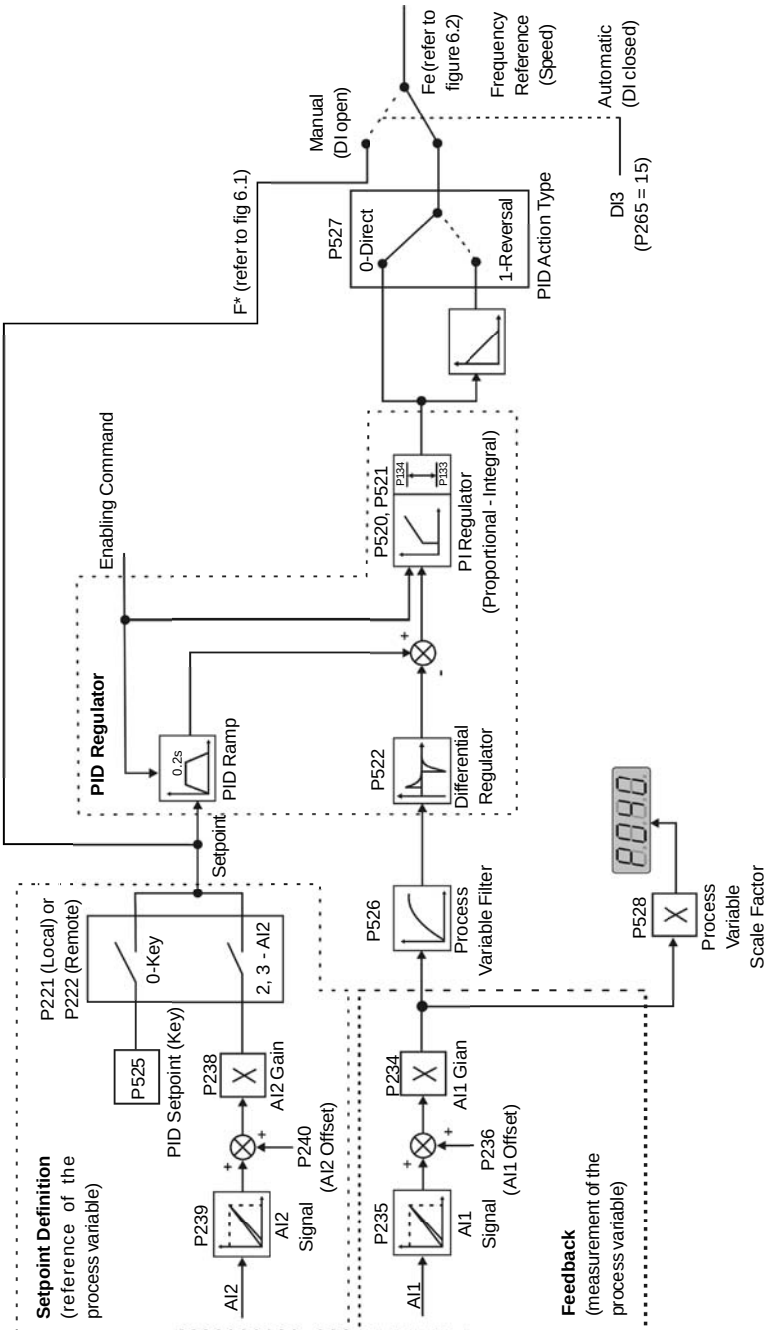

Figure 6.27 *- Block diagram of the PID regulator function*

NOTE!

When the PID function (P203 = 1) is set:

- ☑ The digital input DI3 is automatically set to manual/ automatic (P265 = 15). Thus when DI3 is open, the manual mode is activated and when DI3 is closed, the PID regulator starts to operate (closed loop control - automatic mode). If the function of this digital input (DI3) is changed, the operation of the inverter will be always in manual mode.
- ☑ If P221 or P222 is equal to 1, 4, 5, 6, 7 or 8 the E24 error message will be displayed. Set P221 and P222 equal to 0 or 2 according to the requirement.
- ☑ The JOG and the FWD/REV functions are disabled. The inveter enabling and disabling commands are defined by P229 and P230.
- ☑ In the manual mode, the frequency reference is given by F*, as shown in figure 6.1.
- ☑ When the operation mode is changed from manual to automatic, P525 is automatically set to the value of P040 if P536 = 0 (at the instant immediately before the commutation). Thus when the setpoint is defined by P525 (P221 or P222 = 0), the changing from manual to automatic is smooth [there is not abrupt oscillation in the frequency (speed) reference].
- ☑ The analog output can be programmed to indicate the process variable (P040) or the PID setpoint with P251 = 6 or 9, respectively.
- ☑ Figure 6.28 shows an application example of an inverter controlling a process in closed loop (PID regulator).

6.3.5.3 PID Start-up Guide

☑ Please find below a start-up procedure for the PID regulator:

Initial Definition

1) Process - Definition of the PID action type that the process requires: direct or reverse. The control action must be direct (P527 = 0) when it is required to increase the motor speed and so also increment the process variable. Otherwise select reverse (P527 = 1).
   Examples:
   a) Direct: pump driven by inverter and filling a tank where the PID regulates the tank level. To increase the level height (process variable) the flow must be increased and consequently also the motor speed must be increased.
   b) Reverse: fan driven by an inverter to cool a cooling tower, with the PID controlling the temperature of this tower. When it is required to increase the tower temperature (process variable), the cooling power must be decreased by reducing the motor speed.

2) Feedback (process variable measurement): the feeback is always realized via analog input AI1.
   - ☑ Transducer (sensor) to be used for the feedback of the control variable: it is recommended to use a sensor with full scale with at least 1.1 times higher than the largest value of the process variable that shall be controlled. Example: if a pressure control at 20 bar is desired, select a sensor with a control capacity of at least 22 bar.
   - ☑ Signal type: set P235 and the position of the switch S1 on the control board according to the transducer signal (4 -20 mA, 0 -20 mA or 0 -10 V).

   Set P234 and P236 according to the variation range of the used feedback signal (for more details, refer to description of the parameters P234 to P240).

   Example: suppose the following application:
   - Full scale of the transducer (maximum value at the transducer output) = 25 bar (FS = 25).
   - Operation range (range of interest) = 0 to 15 bar (FO = 15).

   Considering a safety margin of 10 %, the measuring range of the process variable must be set to: 0 to 16.5 bar.
   Thus: FM = 1.1 x FS = 16.5.
   Parameter P234 must be set to:

$$P234 = \frac{FS}{FM} = \frac{25}{16.5} = 1.52$$

   As the operation range starts at zero, P236 = 0, thus a setpoint of 100 % represents 16.5 bar, i.e., the operation range, in percentage, is within: 0 to 90.9 %.

NOTE!
In the most cases it is not necessary to set the gain and the offset (P234 = 1.00 and P236 = 0.0). Thus the percentage value of the setpoint is equivalent to the percentage value of the full scale of the used sensor. However if the maximum resolution of the analog input AI1 (feedback) is desired, set P234 and P238 according to comments above.

Setting of the display indication to the process variable measuring unit (P040): set P528 according to the full scale of the used transducer (sensor) and defined P234 (refer to the description of parameter P528).

3) Reference (setpoint): local/remote mode. Reference source: set P221 or P222 according to definiton above.

4) Speed Limits: set P133 and P134 according to the application.

5) Indication - Display (P040): P040 can be the display default parameter by setting P205 = 6. Analog Output (AO): it is possible to indicate the process variable (feedback) or the setpoint of the PID regulator at the analog output by setting P251 to 6 or 9, respectively.

Start-up

1) Manual operation (DI3 open) - Display indication (P040): check indication based on external measurement and on the feedback signal (transducer) at AI1.
   Indication of the process variable at the analog output (AO), if P251 = 6.
   Set the frequency reference (F*) until the desired value of the process variable is reached.
   Only then switch to the automatic mode (inverter will set automatically P525 = P040) if P536 = 0.

2) Automatic operation: close DI3 and make the dynamic setting of the PID regulator, i.e., adjust the proportional gain (P520), integral gain (P521) and differential gain (P522).

NOTE!

The inverter setting must be correct in order to obtain a good performance of the PID regulator. Ensure the following settings:

- ☑ Torque boosts (P136 and P137) and slip compensation (P138) in the V/F control (P202 = 0 ou 1).
- ☑ Ensure that the self-tuning has been run, if in vector control (P202 = 2).
- ☑ Acceleration and deceleration ramps (P100 to P103).
- ☑ Current limitation (P169).

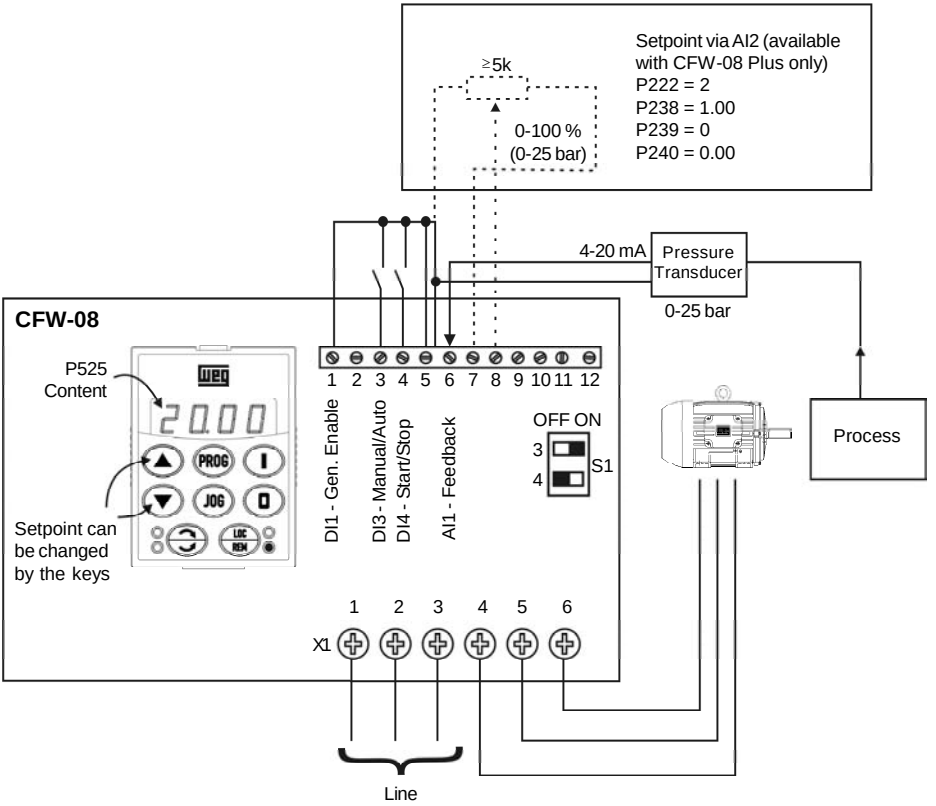

Remote mode operation (P220 = 1).
Setpoint via keypad.
Inverter Parameterization:

P220 = 1	P520 = 1.000
P222 = 0	P521 = 1.000
P234 = 1.00	P522 = 0.000
P235 = 1	P525 = 0
P238 = 0.00	P526 = 0.1s
P203 = 1	P527 = 0
P205 = 6	P528 = 25

Figure 6.28 *- Application example of an inverter with PID regulator*

Parameter	Range [Factory Setting] Unit	Description / Notes
P520 PID Proportional Gain **P521** PID Integral Gain **P522** PID Differential Gain	0.000 to 7.999 [1.000] 0.001 0.000 to 9.999 [1.000] 0.001 0.000 to 9.999 [0.000] 0.001	☑ The integral gain can be defined as being the time required to change the PI regulator output from 0 to P134, that is given, in seconds, by the equation below: $t = \frac{16}{P521 \cdot P525}$ For the following conditions: - P040 = P520 = 0. - DI3 in automatic position.
P525 Setpoint (via Keypad) of the PID Regulator	0.00 to 100.0 [0.00] 0.01 %	☑ Provides the setpoint (reference) of the process via cointrol via the ▲ and ▼ keys for the PID regulator, provided that P221 = 0 (local) or P222 = 0 (remote) has been set to automatic mode. If it has been set to Manual Mode, the frequency reference is given by P121. ☑ If P120 = 1 (backup active), the value of P525 is maintained at the last set value (backup), even when the inverter is disabled or turned off.
P526 Process Variable Filter	0.01 to 10.00 [0.10 s] 0.01 s	☑ It sets the time constant of the Process Variable Filter. ☑ It is useful for noise filtering at the analog input AI1 (feedback of the process variable).
P527 PID Action	0 or 1 [0] -	☑ Defines the action type of the PID regulator. ☑ Select it according to the table below:

P527	Action Type
0	Direct
1	Reverse

Table 6.31 *- Configuration of the action type of the PID regulator*

Process variable requirement	For this the motor speed must	P527 to be used
Increase	Increase	0 (Direct)
Decrease	Increase	1 (Reverse)

Table 6.32 *- Description of the options operations for P527*

Parameter	Range [Factory Setting] Unit	Description / Notes
P528 Process Variable Scale Factor	0.00 to 99.9 [1.00] 0.01 (< 10.0); 0.1 (> 9.99)	☑ Defines the process variable scale. It makes the conversion between percentage value (used internally by the inverter) and the process variable unit. ☑ P528 defines how the process variable at P040 will be shown: P040 = value % x P528. ☑ Set P528 to: $P528 = \frac{\text{full scale of the used sensor (FM)}}{P234}$
P535 Wake up Band	0.00 to 100.00 1.00 % 0.01 %	The parameter P535 influences the “Sleep Mode” only when the PID regulator is active (P203 = 1). The “Sleep Mode”, used together with the PID controller, makes it possible that the inverter be disabled (Srdy) during intervals when the controlled system is without load, and that it be enabled immediately when the system is loaded again. P535 allows programming the error level at the PID regulator output, necessary for the inverter to leave the “Sleep Mode” and to supply the controlled system requirements again. Once the PID regulator is active (P203 = 1), the condition for the inverter to enter the “Sleep Mode” is defined by P212, and the PID regulator error must be lower than zero. When this condition is satisfied during the interval given by P213, the inverter enters the “Sleep Mode”, i.e.: $\text{run} \rightarrow \left\| \begin{array}{c} FE < P212 \\ erro_{PID} \leq 0 \\ \Delta t > P213 \end{array} \right\| \rightarrow \text{Srdy}$ If the PID action is reverse (P527 = 1) the condition for the inverter to enter the “Sleep Mode” becomes: $\text{run} \rightarrow \left\| \begin{array}{c} FE < P212 \\ erro_{PID} \geq 0 \\ \Delta t > P213 \end{array} \right\| \rightarrow \text{Srdy}$ If the action of the PID regulator is direct (P527 = 0), the condition for the CFW-08 to leave the “Sleep Mode” is defined by P212, and the PID regulator error must be higher than the P535 value, i.e.: $\text{Srdy} \rightarrow \left\| \begin{array}{c} FE > P212 \\ erro_{PID} > P535 \\ \Delta t > P213 \end{array} \right\| \rightarrow \text{run}$

Parameter	Range [Factory Setting] Unit	Description / Notes
		If the action of the PID regulator is reverse (P527 = 1), the condition for the CFW-08 to leave the “Sleep Mode” is defined by P212, and by the PID regulator error must be lower than the P535 value, therefore: $$\text{Srdy} \rightarrow \left\Vert \begin{array}{c} FE > P212 \\ erro_{PID} < -P535 \\ \Delta t > P213 \end{array} \right\Vert \rightarrow \text{run}$$ Being: **FE** - Frequency at the ramp input (frequency reference); **$Erro_{PID}$** - The PID setpoint (P525 or AI2) subtracted from the process variable (P040); **Δt** - Elapsed time interval; **Srdy** - Active “Sleep Mode” Indication; **run** - Enabled inverter Indication.
P536 Automatic Setting of P525	0 or 1 [0] -	☑ It is possible to enable/disable the copy of P040 (PID process variable) in P525 when the changing from manual to automatic mode using parameter P536, that is described below.

P536	Function
0	Active (copies the value of P040 in P525)
1	Inactive (does not copies the value of P040 in P525)

Table 6.33 *- Configuration of P536*

DIAGNOSTICS AND TROUBLESHOOTING

This chapter assists the user to identify and correct possible faults that can occur during the CFW-08 operation. Instructions about required periodical inspections and cleaning procedures are also provided.

7.1 FAULTS AND POSSIBLE CAUSES

When a fault is detected, excepting the faults related to the serial communication,the inverter is disabled and the fault code is displayed on the readout in EXX form, where XX is the actual fault code.
To restart the inverter after a fault has occurred, the inverter must be reseted. The reset can be made as follows:

- ☑ Disconnecting and reapplying the AC power (power-on reset).
- ☑ By pressing the 0 key (manual reset).
- ☑ Automatic reset through P206 (auto-reset).
- ☑ Via digital input: DI3 (P265 = 10), DI4 (P266 = 10), DI5 (P267 = 10) or DI6 (P268 = 10).

The table 7.1 defines each fault code, explains how to reset the fault and shows the possible causes for each fault code.

NOTE!
The fault E22, E24, E25, E26, E27 and E28 are related to the serial communication and are described in item 8.24.5.4.

FAULT	RESET [1]	POSSIBLE CAUSES
E00 Output overcurrent (between phases or between phase and ground)	☑ Power-on ☑ Manual (key 0) ☑ Auto-reset ☑ DI	☑ Short-circuit between two motor phases ☑ Short-circuit to the ground at one or more output phases ☑ Motor cable capacitance to ground too high, causing peak current at the output (refer to the note on next page) ☑ Inertia of the load too high, or acceleration ramp too short ☑ P169 set too high ☑ Undue set of P136 and/or P137, when in V/F control (P202 = 0 or 1) ☑ Undue set of P178 and/or P409 when in vector control (P202 = 2) ☑ IGBT transistor module is short-circuited
E01 DC link overvoltage		☑ Power supply voltage too high, causing a DC link voltage higher than the allowed value Ud > 410 V - 200-240 V models Ud > 820 V - 380- 480 V models ☑ Load inertia too high or deceleration ramp too short ☑ Setting of P151 too high ☑ Load inertia too high and acceleration ramp too short (vector control - P202 = 2)

Table 7.1 *- Errors, possible causes and reset ways*

FAULT	RESET [1]	POSSIBLE CAUSES
E02 DC link undervoltage	☑ Power-on ☑ Manual (key 0) ☑ Auto-reset ☑ DI	☑ Power supply voltage too low, causing a DC link voltage lower than the minimum allowed value (read the value in parameter P004) Ud < 200 V - 200 - 240 V models Ud < 360 V - 380 - 480 V models
E04 Overtemperature at the power heatsink or in the inverter internal air		☑ Ambient temperature too high (> 40 °C [104 ºF]) and/or output current too high ☑ Blower locked or defective
E05 Motor/inverter overload Ixt function		☑ P156 set too low for the motor that is being used ☑ Too much load on motor shaft
E06 External fault		☑ Any DI programmed for external fault detection is open (not connected to GND - XC1)
E08 CPU error (Watchdog)		☑ Electrical noise
E09 Program memory error (Checksum)	Contact WEG (refer to item 7.3)	☑ Memory with corrupted values
E10 Keypad copy function error	☑ Power-on ☑ Manual (key 0) ☑ Auto-reset ☑ DI	☑ Defective contact in the HMI-CFW08-RS cable ☑ Electrical noise in the installation (electromagnetic interference)
E14 Self-tuning routine error	☑ Power-on ☑ Manual (key 0)	☑ Motor is not connected to the inverter output ☑ Wrong motor connection (wrong voltage, lack of one Self-tuning routine error phase) ☑ The used motor is too small for the inverter (P401 < 0.3 x P295). Use V/Fcontrol ☑ The value of P409 (stator resistance) is too high for the used inverter
E22 Serial communication error	Refer to the item 8.24.5.4	☑ Serial communication error
E24 Programming error	It is automatically reset when the incompatible parameters are changed	☑ Incompatible parameters were programmed Refer to table 4.1
E25 Serial communication error	Refer to the item 8.24.5.4	☑ Serial communication error
E26 Serial communication error		

Table 7.1 (cont.) *- Errors, possible causes and reset ways*

FAULT	RESET (1)	POSSIBLE CAUSES
E27 Serial communication error	Refer to the item 8.24.5.4	Serial communication error
E28 Serial interface Watchdog timeout error	Refer to the item 8.24.5.4	Serial communication error
E31 Keypad (HMI-CFW08-RS) connection fault	It is reset automatically when the communication between inverter and the keypad is reestablished	☑ Keypad cable misconnected ☑ Electrical noise in the installation (electromagnetic interference)
E32 Motor overtemperature	☑ Power-on ☑ Manual Reset (key 0) ☑ Auto-reset ☑ DIx	☑ Motor is under an overload condition ☑ Duty cycle is too high (too many starts/stops per minute) ☑ Ambient temperature is too high ☑ Bad contact or short-circuit (resistance < 100 Ω) on wiring at terminals XC1:6 and 7 or XC1:7 and 8 of the control board (wiring that comes from the motor thermistor - PTC)
E41 Self- diagnosis fault	Contact WEG (refer to item 7.3)	☑ Inverter power circuit is defective

Table 7.1 (cont.) *- Errors, possible causes and reset ways*

(1) In case of E04 Fault due to inverter overtemperature, allow the inverter to cool down before trying to reset it.
In the types 7.3 A and 10 A/200-240 V and 6.5 A, 10 A, 13 A, 16 A, 24 A and 30 A/380-480 V fitted with internal Category C2 RFI-filters, the fault E04 can be caused by internal airflow overtemperature. Please check blower installed inside.

NOTE!
Long motor cables (longer than 50 m (150 ft)) can generate excessive capacitance to ground. This can cause nuisance ground fault trip and consequently disabling by E00 fault immediately after the inverter has been enabled.
Solution:
- ☑ Reduce the switching frequency (P297).
- ☑ Connect a load reactor in series with the motor supply line. Refer to item 8.22.

NOTE!
The faults act as follows:
- ☑ E00 to E06: switches off the relay that has been programmed to “no fault”, disables the PWM pulses, displays the fault code on the display and the “ERROR” LED flashes. Some data are saved on the EEPROM memory: keypad reference and EP (electronic potentiometer) (when the function “backup of the

references" at P120 has been enabled), the occurred fault number, the status of the integrator of the IxT function (overcurrent).

- ☑ E24: indicates the fault code on the LED display.
- ☑ E31: inverter proceeds to operate normally, but it does not accept the keypad commands; the fault code is indicated on the LED display.
- ☑ E41: does not allow inverter operation (it is not possible to enable the inverter); the fault code is indicated on the LED display and on the "ERROR" LED.

Indication on the Inverter Status LEDs:

Power LED	Error LED	Description
On	Off	Inverter is powered up and is ready
On	(Flashing)	A fault has been detected The Error LED flashes, indicating the number of the fault code Example: E04 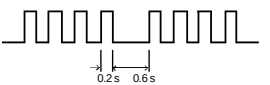

Table 7.2 *- Meaning of LEDs indication for drive status*

7.2 TROUBLESHOOTING

PROBLEM	POINT TO BE CHECKED	CORRECTIVE ACTION
Motor does not run	Incorrect wiring	1.Check the power and the control connections. For example, the digital inputs DIx programmed for Start/Stop or General Enable or No External Fault must be connected to GND (pin 5 of the control connector XC1)
	Analog reference (if used)	1.Check if the external signal is properly connected 2.Check the status of the speed potentiometer (if used)
	Incorrect Programming	1.Check if the parameters are properly programmed for the application
	Fault	1.Check if the inverter has not been disabled due to detected fault condition (refer to item 7.1)
	Motor Stall	1.Reduce the motor load 2.Increase P169 or P136/P137
Motor speed varies (oscillates)	Loose connections	1.Disable the inverter, switch OFF the power supply and tighten all connections
	Defective speed potentiometer	1.Replace the defective speed potentiometer
	Variation of the external analog reference	1.Identify the cause of the variation

Table 7.3 *- Solution for the most frequent problems*

PROBLEM	POINT TO BE CHECKED	CORRECTIVE ACTION
Motor speed too high or too low	Programming error (reference limits)	1.Check if the contents of P133 (minimum frequency) and P134 (maximum frequency) are according to the motor and to the application.
	Signal of the Reference Control (if used)	1.Check the level of the control signal of the reference. 2.Check the programming (gains and offset) at P234 to P240.
	Motor nameplate data	1.Check if the used motor meets the application requirements.
Display OFF	Keypad connection	1.Check the keypad connections to the inverter.
	Power supply	1.The power supply must be within the following ranges: 200-240 V models:- Min: 170 V - Max: 264 V 380-480 V models:- Min: 323 V - Max: 528 V

Table 7.3 (cont.) *- Solution for the most frequent problems*

7.3 CONTACTING WEG

NOTE!
When contacting WEG for services, please have the following data on hand:

- ☑ Inverter model.
- ☑ Serial number, manufacturing date and hardware revision, as indicated in the inverter nameplate (refer to item 2.4).
- ☑ Software version (refer to item 2.2).
- ☑ Information about the application and inverter programming.

7.4 PREVENTIVE MAINTENANCE

DANGER!
Always disconnect the power supply voltage before touching any component of the inverter.

Even after switching OFF the inverter, high voltages may be present. Wait 10 minutes to allow complete discharge of the power capacitors.
Always connect the equipment frame to a suitable ground (PE) point.

ATTENTION!
Electronic boards have components sensitive to electrostatic discharges.
Never touch the components or connectors directly. If this is unavoidable, first touch the metallic frame or use a suitable ground strap.

Never apply a high voltage test on the inverter!
If this is necessary, contact WEG.

To avoid operation problems caused by harsh ambient conditions, such as high temperature, moisture, dirt, vibration or premature ageing of the components, periodic inspections of the inverter and installations are recommended.

COMPONENTS	PROBLEMS	CORRECTIVE ACTIONS
Terminal blocks	Loose screws	Tighten them
	Loose connectors	
Blowers / Cooling system	Blowers are dirty	Clean them
	Abnormal acoustic noise	Replace the blowers
	Blower is not running	
	Abnormal vibration	
	Dust in the air filters	Clean or replace them
Printed circuit boards	Dust, oil or moisture accumulation	Clean them and/or replace them
	Smell	Replace them

Table 7.4 *- Periodic inspection after start-up*

NOTE!

- ☑ It is recommended to replace the blowers after 40,000 hours of operation.
- ☑ When the drive is stored for a long time, it is recommended to power the drive up and keep it running for 1 hour every year. Make sure to use a power supply with the following characteristics for all models (200-240V or 380-480V): 220V, single-phase or three-phase, 50 Hz or 60 Hz (for three-phase power supply),without connecting the motor to the drive output. After powering up the drive, keep it off for 24 hours before using it again.

7.4.1 Cleaning Instructions

When required to clean the inverter, follow the instructions below:

a) Cooling System:

- ☑ Remove AC power from the inverter and wait 10 minutes.
- ☑ Remove all dust from ventilation openings by using a plastic brush or a soft cloth.
- ☑ Remove dust accumulated on the heatsink fins and from the blower blades with compressed air.

b) Electronic Boards:

- ☑ Remove AC power from the inverter and wait 10 minutes.
- ☑ Disconnect the inverter cables, ensuring that they are marked carefully to facilitate later reconnection.
- ☑ Remove the keypad and the plastic cover (refer to chapter 3).
- ☑ Remove all dust from the printed circuit boards by using an anti-static soft brush and/or remove it with an ionized compressed air gun, (for example: Charges Burtes Ion Gun (non nuclear) Ref. A6030-6 DESCO).

CFW-08 OPTIONS AND ACCESSORIES

This chapter describes the optional devices that can be used internal or external with the CFW-08. Table below shows a list of existing optional devices and the types to which they are applied. In the other items also are given information about the optional devices and their application.

Name	Function	Models to which are applied	WEG item number
HMI-CFW08-P	Parallel keypad (HMI)	All	417118200
TCL-CFW08	Cover to be inserted in the place of the parallel HMI (when it is mounted in the inverter or it is remote - kit KMR-CFW08-P)		417118211
HMI-CFW08-RP	HMI parallel keypad. For remote use with MIP-CFW08-RP interface and CAB-CFW08-RP cable (up to 10 m [32.8 ft])		417118217
MIP-CFW08-RP	Interface for the external parallel keypad (remote) HMI-CFW08-RP		417118216
HMI-CFW08-RS	HMI serial keypad. For remote use with MIS-CFW08-RS interface and CAB-RS cable (up to 10 m [32.8 ft]). Copy Function		417118218
MIS-CFW08-RS	Interface for the external serial keypad (remote) HMI-CFW08-RS		417118219
CAB-RS-1	Cable for the remote serial keypad - cable: 1 m (3.28 ft)		0307.7827
CAB-RS-2	Cable for the remote serial keypad - cable: 2 m (6.56 ft)		0307.7828
CAB-RS-3	Cable for the remote serial keypad - cable: 3 m (9.84 ft)		0307.7829
CAB-RS-5	Cable for the remote serial keypad - cable: 5 m (16.4 ft)		0307.8113
CAB-RS-7.5	Cable for the remote serial keypad - cable: 7.5 m (24.6 ft)		0307.8114
CAB-RS-10	Cable for the remote serial keypad - cable: 10 m (32.8 ft)		0307.8115
CAB-RP-1	Cable for the remote parallel keypad - cable: 1 m (3.28 ft)		0307.7711
CAB-RP-2	Cable for the remote parallel keypad - cable: 2 m (6.56 ft)		0307.7712
CAB-RP-3	Cable for the remote parallel keypad - cable: 3 m (9.84 ft)		0307.7713
CAB-RP-5	Cable for the remote parallel keypad - cable: 5 m (16.4 ft)		0307.7833
CAB-RP-7.5	Cable for the remote parallel keypad - cable: 7.5 m (24.6 ft)		0307.7834
CAB-RP-10	Cable for the remote parallel keypad - cable: 10 m (32.8 ft)		0307.7835
KCS-CFW08	RS-232 serial communication interface (PC, PLC, etc)		417118212
KSD-CFW08	RS-232 PC Communication kit : interface RS-232 (KCS-CFW08), cable RJ-11 to DB9, 3 m (9.84 ft) long, software “SUPERDRIVE”		417118207
KRS-485-CFW08	RS-485 serial communication interface and keypad		417118213
KFB-CO-CFW08	CANopen communication interface and keypad	All, however the version A3 of the control board is needed (refer to item 2.4)	417118221
KFB-DN-CFW08	DeviceNet communication interface and keypad	All, however the version A4 of the control board is needed (refer to item 2.4)	417118222
KAC-120-CFW08	Interface for 120 Vac digital inputs	22-28-33 A/ 200-240 V and 13-16-24-30 A/ 380-480 V	417118223
KAC-120-CFW08 N1M1	Interface for 120 Vac digital inputs + Kit Nema 1	1.6-2.6-4.0-7.0 A/ 200-240 V and 1.0-1.6-2.6-4.0 A/ 380-480 V	417118224
KDC-24VR-CFW08	24 Vdc power supply with an interface for the CFW-08 remote parallel HMI connection	All	10941082

Table 8.1 *- Available optional devices for the CFW-08*

Name	Function	Models to which are applied	WEG item number
KDC-24V-CFW08	24 Vdc power supply with the CFW-08 HMI	All	10941080
KAC-120-CFW08 - N1M2	Interface for 120 Vac digital inputs + Kit Nema 1	7.3-10-16 A/ 200-240 V and 2.7-4.3-6.5-10 A/ 380-480 V	417118225
KMD-CFW08-M1	Rail Kit DIN EN 50.022	1.6-2.6-4.0-7.0 A/ 200-240 V 1.0-1.6-2.6-4.0 A/ 380-480 V	417100879
KFIX-CFW08-M1	Fix Kit -M1	1.6-2.6-4.0-7.0 A/ 200-240 V 1.0-1.6-2.6-4.0 A/ 380-480 V	417100994
KFIX-CFW08-M2	Fix Kit - M2	7.3-10-16 A/ 200-240 V 2.7-4.3-6.5-10 A/ 380-480 V	417100995
KN1-CFW08-M1	Kit Nema 1/IP20 for the connection of the metallic conduit -M1	1.6-2.6-4.0-7.0 A/ 200-240 V 1.0-1.6-2.6-4.0 A/ 380-480 V	417118209
KN1-CFW08-M2	Kit Nema 1/IP20 for the connection of the metallic conduit -M2	7.3-10-16 A/ 200-240 V 2.7-4.3-6.5-10 A/ 380-480 V	417118210
FIL1	Internal Category C2 suppressor filter RFI - A - 7.3-10 A/ 200-240 V	7.3-10 A/ 200-240 V	4151.2661
FIL2	Internal Category C2 suppressor filter RFI- A - 2.7-4.3-6.5-10 A/380-480 V	2.7-4.3-6.5-10 A/ 380-480 V	4151.0994
FIL4	Internal Category C2 suppressor filter - RFI - 13-16 A/380-480 V	13-16 A/ 380-480 V	4151.2148
FEX1-CFW08	10 A/200-240 V Category C2 RFI filter - footprint	1.6-2.6-4.0 A/ 200-240 V	417118238
FEX2-CFW08	5 A/380-480 V Category C2 RFI filter - footprint	1.0-1.6-2.6-4.0 A/ 380-480 V	417118239
FS6007-16-06	External Category C1 suppressor filter - RFI - 1.6-2.6-4.0 A/200-240 V	1.6-2.6-4.0 A/ 200-240 V	0208.2072
FN3258-7-45	External Category C1 suppressor filter - RFI - 1.0-1.6-2.6-2.7-4.0-4.3 A/380-480 V	1.0-1.6-2.6-2.7-4.0-4.3 A/380-480 V	0208.2075
FS6007-25-08	External Category C1 suppressor filter - RFI - 7.3 A/ 200-240 V single-phase	7.3 A/200-240 V	0208.2073
FS6007-36-08	External Category C1 suppressor filter - RFI - 10 A/200-240 V single-phase	10 A/200-240 V	0208.2074
FN3258-16-45	External Category C1 suppressor filter - RFI - 6.5-10-13 A/ 380-480 V	6.5-10-13 A/ 380-480 V; 7 A/200-240 V; 7.3-10 A/200-240 V three-phase	0208.2076
FN3258-30-47	External Category C1 suppressor filter - RFI 16 A, 24 A/ 380-480 V	16-24 A/380-480 V; 16-22 A/200-240 V	0208.2077
FN3258-55-52	External suppressor filter - RFI Category C2 - 30 A/ 380-480 V	30 A/380-480 V; 28-33 A/200-240 V	0208.2078
TOR1-CFW08	CM choke toroid #1 (Thornton NT35/22/22-4100-IP12R) and plastic clamp	2.7-4.3-6.5-10 A/ 380-480 V	417100895
TOR2-CFW08	CM choke toroid #2 (Thornton NT52/32/20-4400-IP12E)	2.7-4.3-6.5-10-13-16 A/380-480 V	417100896

Table 8.1 (cont.) - *Available optional devices for the CFW-08*

8.1 HMI-CFW08-P

Parallel keypad (HMI): is the keypad that is mounted at the front side of the inverter.

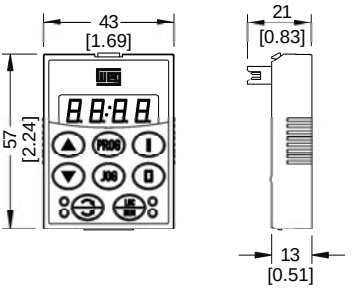

Figure 8.1 *- Dimensions in mm [in] of the parallel HMI - HMI-CFW08-P*

8.1.1 Instruction for Insertion and Removing of the HMI-CFW08-P

a) Insertion

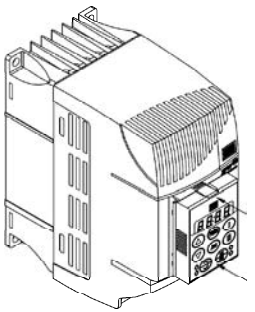

1. Place the keypad as shown above.
2. Press it.

b) Removing

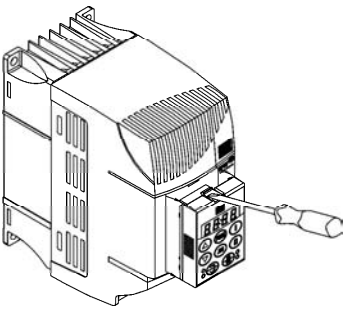

1. Unlock the keypad by using a screwdriver as shown above.
2. Remove the keypad by pulling on the lateral sides.

Figure 8.2 a) and b) *- Instructions for HMI-CFW08-P insertion and removing*

8.2 TCL-CFW08

Dummy panel to be inserted in the place of the parallel keypad (HMI-CFW08-P).

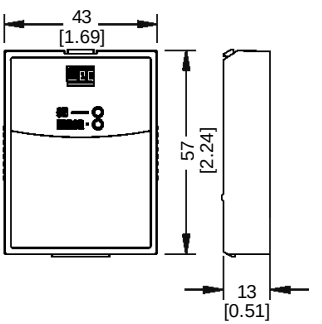

Figure 8.3 *- Dimensions in mm [in] of the dummy panel TCL-CFW08 for the parallel HMI*

8.3 HMI-CFW08-RP

External parallel keypad: this keypad is mounted externally to the inverters with Nema 12/IP54 degree of protection and can be used in the following cases:

- ☑ Applications that require a remote keypad (up to 10 m / 32.8 ft).
- ☑ For the HMI installation at a panel door (0.12 in) or command console.
- ☑ For a better visualization on the display and to facilitate the keypad operation, when compared with the parallel keypad (HMI-CFW08-P).

The external parallel keypad (HMI-CFW08-RP) must be used with the MIP-CFW08-RP interface and CAB-RP-X cable.

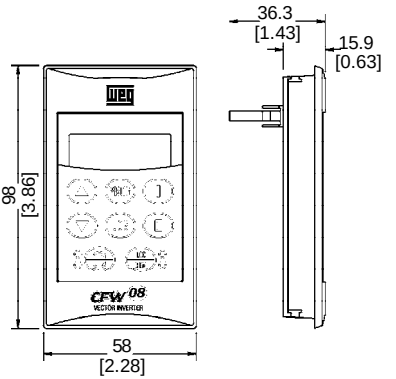

Figure 8.4 - *Dimensions in mm [in] of the HMI-CFW08-RP*

NOTE!
This optional is not compatible with the version “A3” and “A4” of the control board. Refer to item 2.4 for further information on these control boards.

8.3.1 HMI-CFW08-RP Installation

The HMI-CFW08-RP can be installed directly on the panel door (0.12 in), as shown in the figures below:

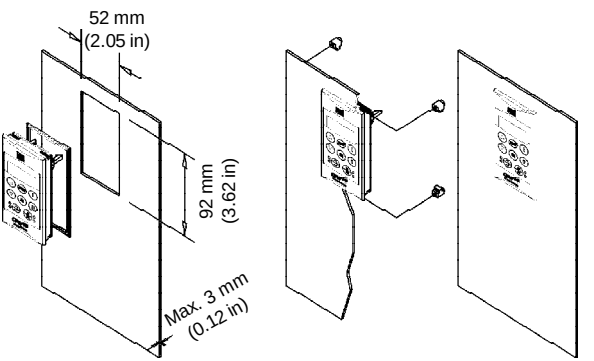

Figure 8.5 - *Installation of the HMI-CFW08-RP*

8.4 MIP-CFW08-RP

Interface for the external parallel keypad HMI-CFW08-RP, installed in the inverter instead of the standard keypad only when the remote parallel keypad (HMI-CFW08-RP) is used. The procedures for insertion and removing of the MIP-CFW08-RP are similar to those shown in figure 8.16 for the KCS-CFW08 module.

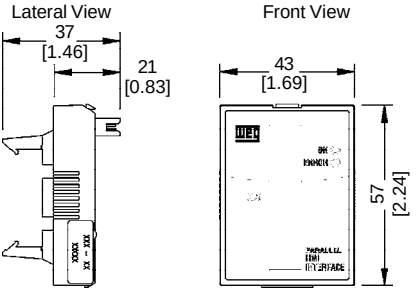

Figure 8.6 *- Dimensions in mm [in] of the MIP-CFW08-RP*

8.5 CAB-RP-1 / CAB-RP-2 / CAB-RP-3 / CAB-RP-5 / CAB-RP-7.5 / CAB-RP-10

Cables used to connect the inverter to the external parallel interface keypad (HMI-CFW08-RP).
There are 6 cables options ranging in lenghts from 1 m (3.28 ft) to 10 m (32.8 ft). The user must select among these lenghts according to the requirement.
The cable CAB-RP must be laid separately from the power wiring by meeting the requirements for the control wiring (refer to item 3.2.5).

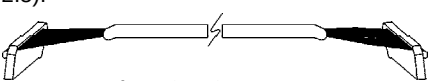

Figure 8.7 *- CAB-RP-X*

8.6 HMI-CFW08-RS

External serial keypad: this interface is mounted external to the inverters with Nema 12/IP54 degree of protection and must be used when the copy function is needed:

☑ For more details about copy function refer to the description of the parameter P215 in chapter 6.

It operates with the MIS-CFW08-RS and the cable CAB-RS-X, which length must be chosen according to the needs (up to 10 m (32.8 ft)).

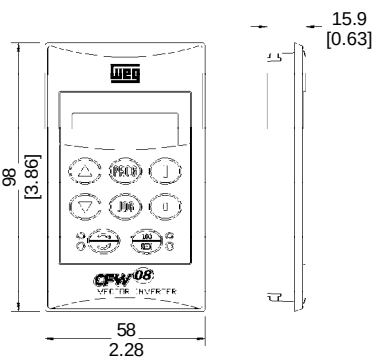

Figure 8.8 *- Dimensions in mm [in] of the HMI-CFW08-RS*

NOTE!

☑ Due to the internal processing time of CFW-08 it is not possible to use the external serial keypad, with the switching frequency set to 15 kHz (P297 = 7).

☑ This optional is not compatible with the version “A3” and “A4” of the control board. Refer to item 2.4 for further information on these control boards.

8.6.1 HMI-CFW08-RS Installation

The remote serial keypad (HMI-CFW08-RS) can be installed in the cabinet door (door thickness between 1 and 3 mm [0.04 and 0.12 in]), as presented in the following figures.

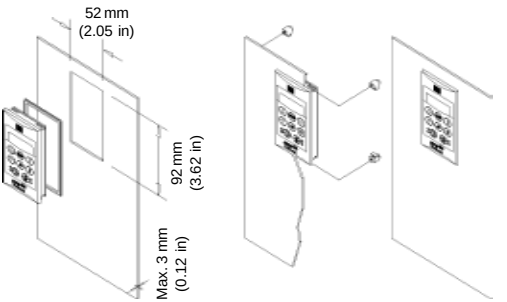

Figure 8.9 *- Installation of the HMI-CFW08-RS*

8.6.2 HMI-CFW08-RS Start-up

After installation (including interconnecting cable), power-up the inverter.

HMI-CFW08-RS must display rdy.

The inverter programming via HMI-CFW08-RS is exactly the same as the inverter programming via HMI-CFW08-P (for more details about the programming, refer to chapter 4).

To enable all the keys of the HMI-CFW08-RS and thus make it equivalent to HMI-CFW08-P both for programming and operation, set the following parameters:

Function via HMI-CFW08-RS	Local Mode	Remote Mode
Frequency reference	P221 = 0	P222 = 0
Commands (*)	P229 = 2	P230 = 2
Forward/Reverse Selection	P231 = 2	
Local/Remote Selection	P220 = 5 (default local) or P220 = 6 (default remote)	

Note:

Factory Setting

(*) Except the forward/reverse selection that also depends on the parameter P231.

Table 8.2 *- Parameter setting for HMI-CFW08-RS operation*

8.6.3 Keypad Copy Function

The HMI-CFW08-RS keypad still has an additional function: the keypad copy function.This function is useful when one wants to copy the settings of one inverter (source inverter) to another (target inverter) or one needs to program several inverters with the same settings.
This is done as follows: the parameters of the source inverter are copied to a non-volatile memory of the HMI-CFW08-RS keypad , and then from this keypad to another inverter (“target inverter"). The keypad copy function is controlled by the parameter P215.
For further information on this function refer to parameter P215 in the chapter 6.

8.7 MIS-CFW08-RS

Serial interface used exclusively for HMI-CFW08-RS keypad connection to inverter.
The procedures for insertion and removing of the MIS-CFW08-RS are similar to those shown in figure 8.16 for the KCS-CFW08 module.

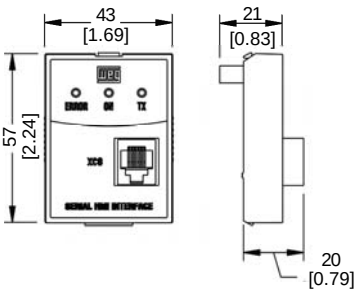

Figure 8.10 *- Dimensions in mm [in] of the MIS-CFW08-RS serial communication module for the external serial HMI*

8.8 CAB-RS-1 CAB-RS-2 CAB-RS-3 CAB-RS-5 CAB-RS-7.5 CAB-RS-10

Cables used to connect the inverter to the external serial interface keypad (HMI-CFW08-RS). There are 6 cable options ranging in lengths from 1 m to 10 m (3.28 ft to 32.8 ft). The user must select among these lengths according to the requirement. The cable CAB-RS must be laid separately from the power wiring by meeting the requirements for the control wiring (refer to item 3.2.5).

Figure 8.11 *- CAB-RS-X*

NOTE!
Cables with 5 m (16.4 ft) and longer ones (5 m (16.4 ft), 7.5 m (24.6 ft) and 10 m (32.8 ft)) are shielded, and their shield must be connected to the ground.

NOTE!
The external serial keypad (HMI-CFW08-RS) can be used up to 150 m (492.1 ft), for distance higher than 10 m (32.8 ft) it is necessary to use a 12 Vdc external power supply in the external serial keypad, as shown in the figure below:

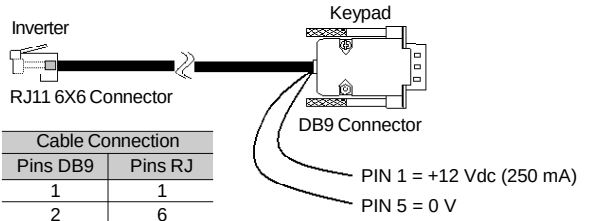

Cable Connection	
Pins DB9	Pins RJ
1	1
2	6
3	4
5	5

Note: WEG supplies cables with this configuration for 15 m (49.2 ft), 20 m (65.6 ft) and 25 m (82 ft). Longer cables are not supplied by WEG.

Figure 8.12 - *CAB-RS-X*

8.9 KDC-24VR-CFW08

24 Vdc power supply with HMI for the CFW-08:
This optional module makes it available a 24 Vdc power supply with 75 mA maximum current capacity and short-circuit protection. The power supply reference (0 V – GND) is the same of the terminal 5 on the control board.
The module also makes available an interface for the remote parallel HMI connection, in order to set the CFW-08 frequency inverter from a panel door.
This optional module is inserted at the front cover of the inverter in the place of the standard HMI (HMI-CFW08-P). For further details on the installation of this optional module, refer to the section regarding the installation of the KCS-CFW08 option in this manual. The 24 Vdc power supply polarity is indicated above the terminals, according to the figure 8.13.

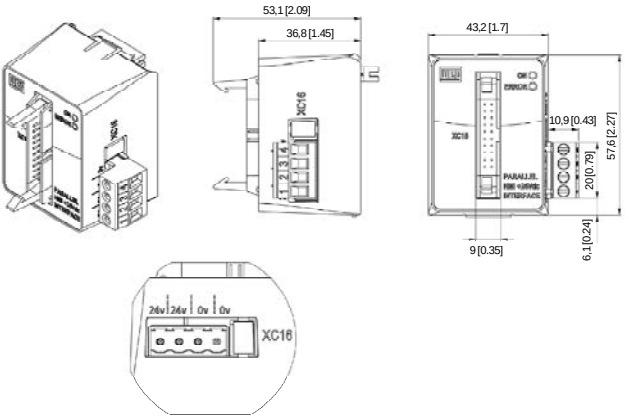

Figure 8.13 *- Dimensions in mm [in] of the optional module KDC-24VR-CFW08 and XC16 connector signals*

8.10 KDC-24V-CFW08

24 Vdc power supply with HMI for the CFW-08:
This module makes it available a 24 Vdc power supply with 100 mA maximum current capacity and short-circuit protection. The power supply reference (0 V - GND) is the same of the terminal 5 on the control board.
The module also makes available a standard HMI in order to set the CFW-08 frequency inverter.
This optional module is inserted at the front cover of the inverter in the place of the standard HMI (HMI-CFW08-P). For further details on the installation of this optional module, refer to the section regarding the installation of the KCS-CFW08 option in this manual.
The 24 Vdc power supply polarity is indicated above the terminals, according to the figure 8.14.

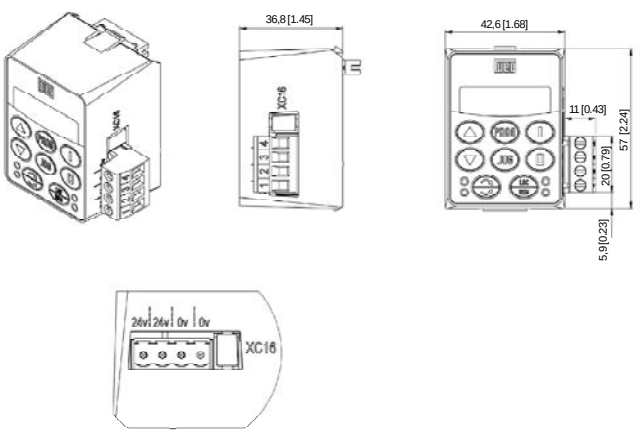

Figure 8.14 *- Dimensions in mm [in] of the optional module KDC-24V-CFW08 and XC16 connector signals*

8.11 KCS-CFW08

Serial communication module RS-232: is inserted in the place of the parallel keypad, enabling the RS-232 connection (connector RJ-6).

The RS-232 serial interface enables the point-to-point connection (inverter - master). It is gavanically isolated and enables the use of interconnecting cables in lengths up to 10 m (32.8 ft).

Through the RS-232 serial interface you can control, set parameters and monitor the CFW-08. The communication protocol is based on the communication by enquiry/response (master/slave), according to ISO 1745, ISO 646, with character exchange of type ASCII between the inverter (slave) and the master. The Master can be a PLC, a PC, etc. The maximum transfer rate is 38400 bps.

For the RS-485 serial communication, both point-to-point (an inverter and a master) or multipoint (up to 30 inverters and one master), you can connect the KCS-CFW08 module to an KRS-485-CFW08 module - for more details, refer to item 8.13.

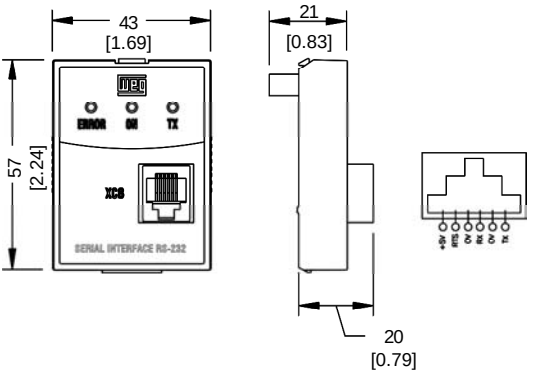

Figure 8.15 *- Dimensions in mm [in] of the RS-232 serial communication module KCS-CFW08 and RJ (XC8) signal connector*

8.11.1 Instructions for KCS-CFW08 Insertion and Removal

a) Insertion

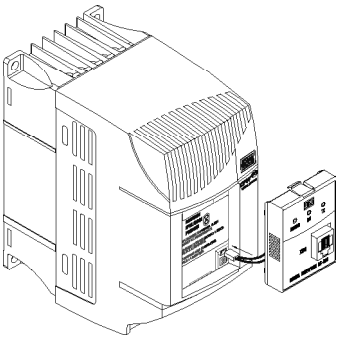

- Connect the cable of the communication module to XC5.

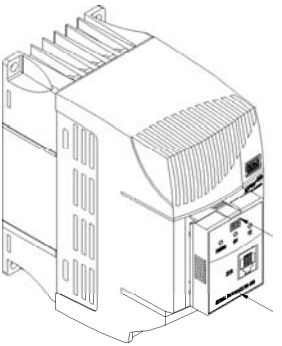

- Place the communication module as shown in figure above.
- Press it.

b) Removing

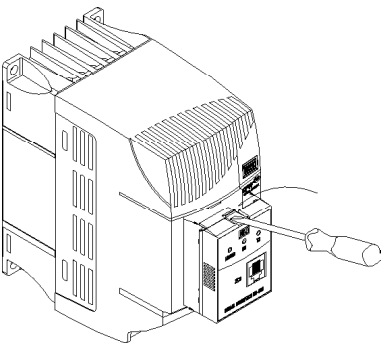

- Use a screwdriver to unlock the communication module.
- Remove the module by pulling it on the lateral sides.

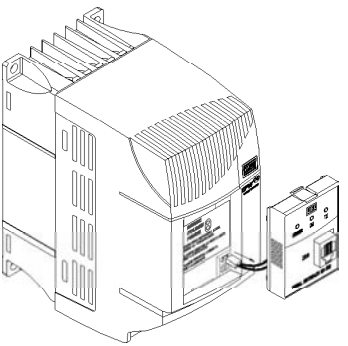

- Remove the cable of the XC5 connector.

Figure 8.16 a) and b) *- Insertion and removal of the serial communication module RS-232 KCS-CFW08*

8.12 KSD-CFW08

The complete kit, that enables the connection of the CFW-08 to a PC via RS-232 contains:

- Serial communication module RS-232 (KCS-CFW08);
- 3 m (9.8 ft) cable RJ-11 for the DB9;
- Software SuperDrive that enables the CFW-08 programming, operating and monitoring. Refer to the SuperDrive manual for hardware and system configurations.

NOTE!
For communication with the CFW-08 use the first generation programming software SuperDrive. The second generation software named SuperDrive G2 is not compatible with this product.

To install the RS-232 communication kit on the PC, proceed as follows:
- Remove the parallel keypad (HMI-CFW08-P) from the inverter.
- Install the serial communication module RS-232 (KCS-CFW08) in the place of the keypad.
- Install the software “SuperDrive” in the PC.
- Connect the inverter to the PC through the cable.
- Follow the instruction given by the “SuperDrive”.

8.13 KRS-485-CFW08

RS-485 Serial Communication Module and Keypad:
This optional module, with an RS-485 connection (plug-in connector) and a keypad, is installed in the front of the inverter in the place of the standard parallel keypad (HMI-CFW08-P). For instruction on how inserting and removing this module, refer to the installation instruction for the KCS-CFW08 in this manual.
The functions of each pin are indicated in the silk screening above the communication connector.
The RS-485 interface allows a multi-point connection of up to 1000 m (3280.8 ft) using the Modbus-RTU or WEG protocols. These protocols are described in the item “Serial Communication” of this manual.
It is possible to command, setup and monitor the CFW-08 through the RS-485 serial interface. In this case, the master can be a PLC, a PC, etc.

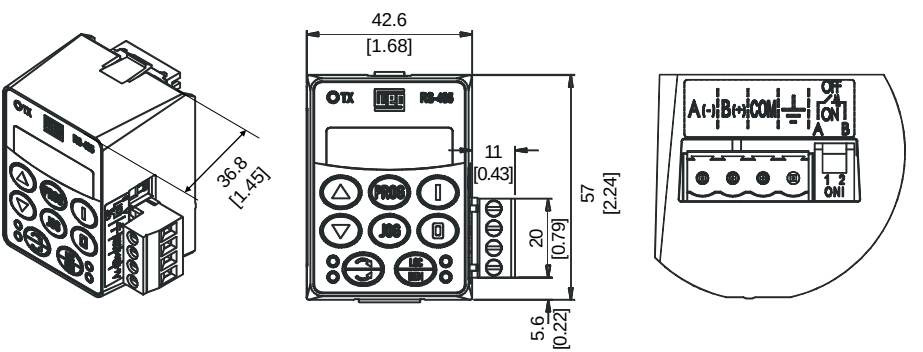

Figure 8.17 *- Dimensions in mm [in] of the RS-485 serial communication module KRS-485-CFW08*

The following figure shows some possibilities for connecting this module in a RS-485 network. Usually, the connection a) is applied, but connections b) and c) can also be used according to the situation.

Notice that terminal indicated by the symbol ⏚ shall be connected to the ground.

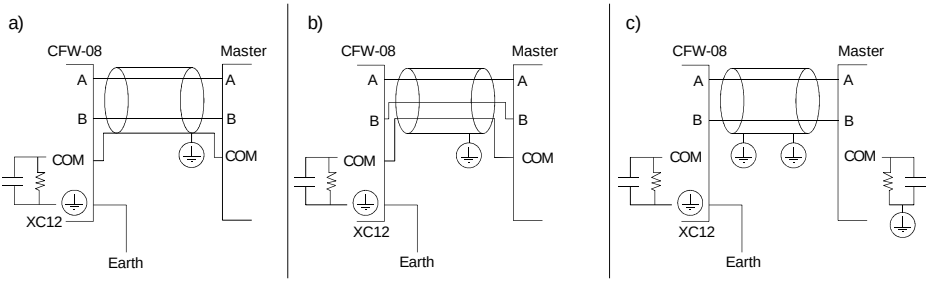

Figure 8.18 a) to c) *- Connection possibilities for the KRS-485-CFW08 module*

8.14 KFB-CO-CFW08

CANopen Communication Module and Keypad:

This optional module, with a CANopen interface (plug-in connector) and a keypad, is installed in the front of the drive in the place of the standard parallel keypad (HMI-CFW08-P).

For instruction on how inserting and removing this module, refer to the installation instruction for the KCS-CFW08 in this manual.

The functions of each pin are indicated in the silk screening above the communication connector.

It is possible to command, setup and monitor the CFW-08 through this communication interface. In this case, the master can be a PLC, the CFW-09 with a PLC board, etc.

This module can be purchased along with the inverter just by including the code “A3” in the control board field of the product part number, such as, CFW080040S2024PO<u>A3Z</u> (refer to item 2.4 of this manual for further information on how ordering the product).

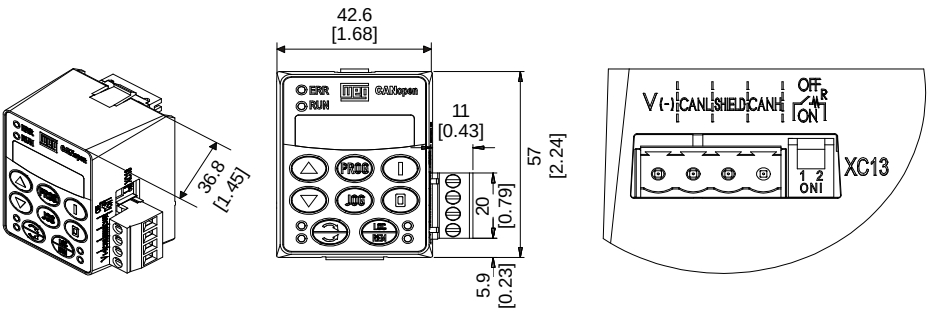

Figure 8.19 *- Dimensions in mm [in] of the CANopen communication module KFB-CO-CFW08*

The following figure shows some possibilities for connecting the module in a CANopen network. Usually, the connection a) is applied, but connection b) can also be used according to the situation. Notice that terminal indicated by the symbol ⏚ shall be connected to the ground.

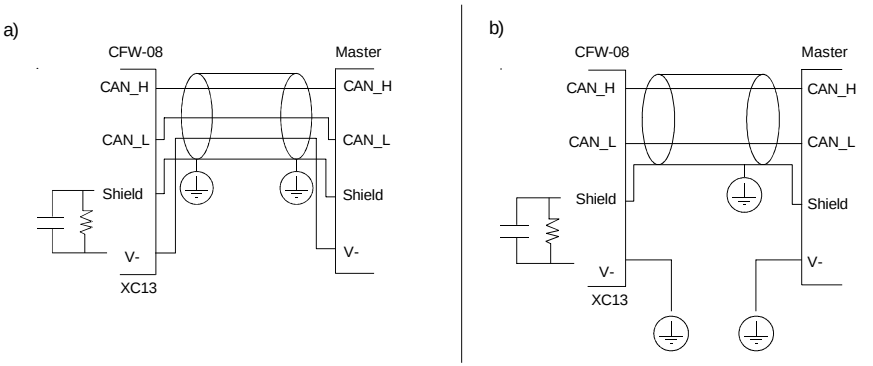

Figure 8.20 a) and b) - *Connection possibilities for the KFB-CO-CFW08 module*

ATTENTION!

- ☑ This module can only be used with the drives that have the "A3" initials in the nameplate (refer to item 2.4 of this manual). Otherwise, the CANopen communication as well as the keypad will not work.
- ☑ It is not possible to use the parallel keypad, the serial remote keypad, the parallel remote keypad, and the serial protocols (such as Modbus and WEG) with version "A3" of the control board.

8.15 KFB-DN-CFW08

DeviceNet Communication Module and Keypad:
This optional module, with a DeviceNet interface (plug-in connector) and a keypad, is installed in the front of the inverter in the place of the standard parallel keypad (HMI-CFW08-P). For instruction on how inserting and removing this module, refer to the installation instruction for the KCS-CFW08 in this manual.
The functions of each pin are indicated in the silk screening above the communication connector.
It is possible to command, setup and monitor the CFW-08 through this communication interface. In this case, the master can be a PLC or other device that supports this communication protocol.
This module can be purchased along with the inverter just by including the code "A4" in the control board field of the product part number, such as, CFW080040S2024PO<u>A4</u>Z (refer to item 2.4 of this manual for further information on how ordering the product).

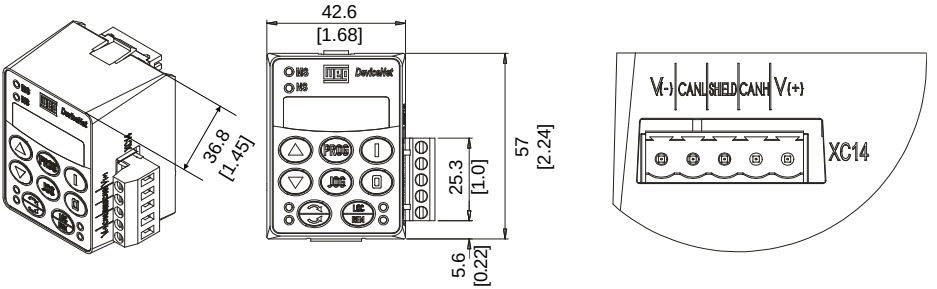

Figure 8.21 - *Dimensions in mm [in] of the DeviceNet communication module KFB-DN-CFW08*

The figure below shows how to connect this module in a DeviceNet network (this connection follows the DeviceNet resolution).

NOTE!
Terminal 5 (GND) of the control board shall be grounded.

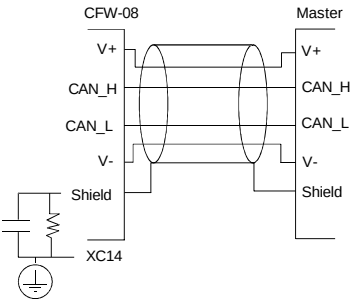

Figure 8.22 - *Connection possibilities for the KFB-DN-CFW08 module*

ATTENTION!

- ☑ This module can only be used with the drives that have the “A4” initials in the intelligent code (refer to item 2.4 of this manual). Otherwise, the DeviceNet communication as well as the keypad will not work.
- ☑ It is not possible to use the parallel keypad, the serial remote keypad, the parallel remote keypad and the serial protocols (such as Modbus and WEG) with version “A4” of the control board.

8.16 KAC-120-CFW08
KAC-120-CFW08-N1M1
KAC-120-CFW08-N1M2

This optional is used to operate the digital inputs with alternate voltage (120 Vac).
This board shall be externally connected to the control board and the function of each terminal is described in the optional itself. For safety purposes, the Nema 1 kit shall be used along with this optional. Therefore, the following models can use this optional:

KAC-120-CFW08 (only 120 Vac board):
Models: 22-28-33 A/200-240 V and 13-16-24-30 A/380-480 V

KAC-120-CFW08-N1M1 (120 Vac board and KN1-CFW08-M1):
Models: 1.6-2.6-4.0-7.0 A/200-240 V and 1.0-1.6-2.6-4.0 A/380-480 V

KAC-120-CFW08-N1M2 (120 Vac board and KN1-CFW08-M2):
Models: 7.3-10-16 A/200-240 V and 2.7-4.3-6.5-10 A/380-480 V

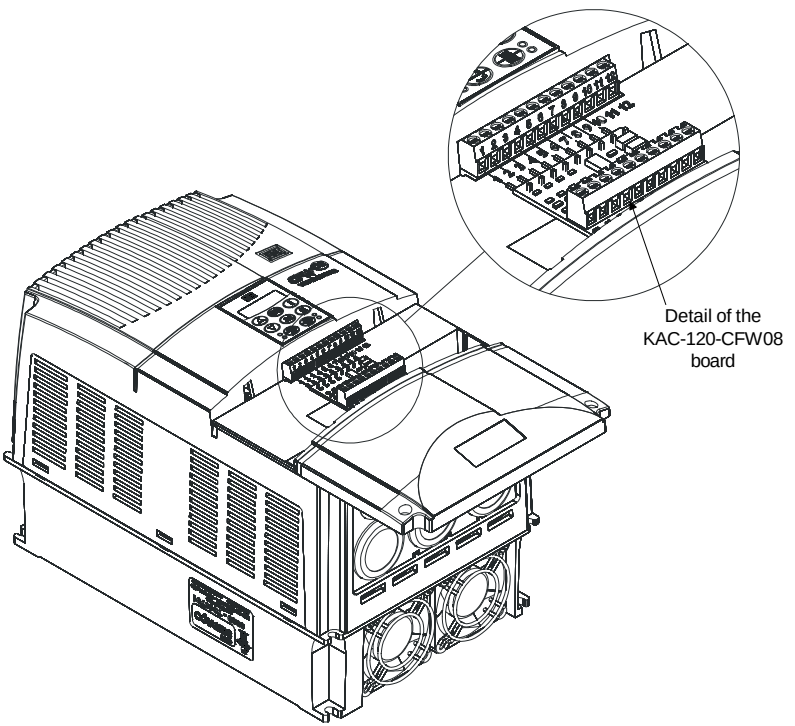

Figure 8.23 - *KAC-120-CFW08*

8.17 KMD-CFW08-M1

This device must be used when the installation of the inverter on 35 mm (1.38 in) rail, according to DIN EN 50.022, is desired Only available for the models: 1.6-2.6-4.0-7.0 A/ 200-240 V and 1.0-1.6-2.6-4.0 A/380-480 V

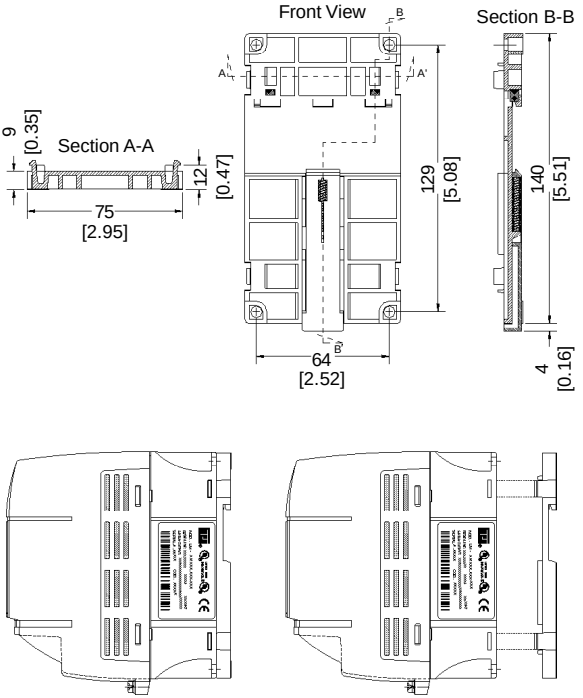

Figure 8.24 *- Inverter with DIN rail kit (KMD-CFW08-M1), dimensions in mm [in]*

8.18 KFIX-CFW08-M1 KFIX-CFW08-M2

This kit must be used when a better access to the screw hole of the inverter is needed. Models that use this kit:

KFIX-CFW08-M1
Models: 1.6-2.6-4.0-7.0 A/200-240 V; 1.0-1.6-2.6-4.0 A/ 380-480 V

KFIX-CFW08-M2
Models: 7.3-10-16 A/200-240 V; 2.7-4.3-6.5-10 A/380-480 V

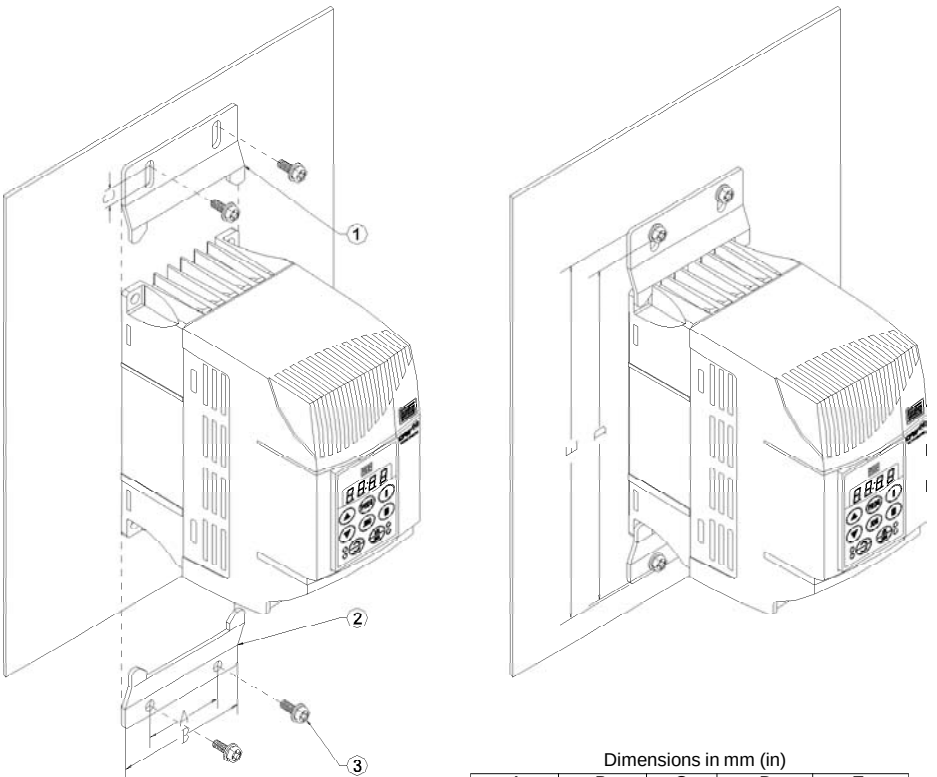

Dimensions in mm (in)

	A	B	C	D	E
KFIX-CFW08-M1	50 (1.97)	75 (2.95)	8 (0.31)	180 (7.09)	190 (7.48)
KFIX-CFW08-M2	80 (3.15)	115 (4.53)	8 (0.31)	228 (8.98)	238 (9.37)

Figure 8.25 - *Dimensions of the inverter with the KFIX-CFW08-MX kit*

8.19 KN1-CFW08-M1 KN1-CFW08-M2

This kit is used when a Nema 1/IP20 degree of protection is desired for the inverter or when wiring metallic conduits for the inverter are desired.
Models that use this kit:
KN1-CFW08-M1:
Models: 1.6-2.6-4.0-7.0/220-240 V; 1.0-1.6-2.6-4.0/380-480 V
KN1-CFW08-M2:
Models: 7.3-10-16 A/200-240 V; 2.7-4.3-6.5-10 A/380-480 V
Models 13 and 16 A/380-480 V have Nema 1/IP20 degree of protection in the standard version.

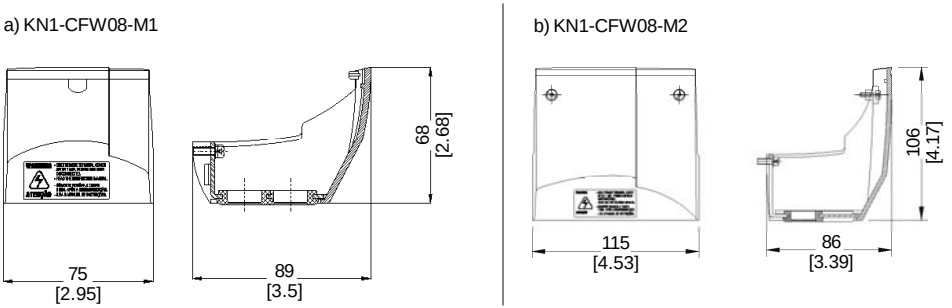

Figure 8.26 a) and b) *- Dimensions in mm [in] of the Nema 1/IP20 kits*

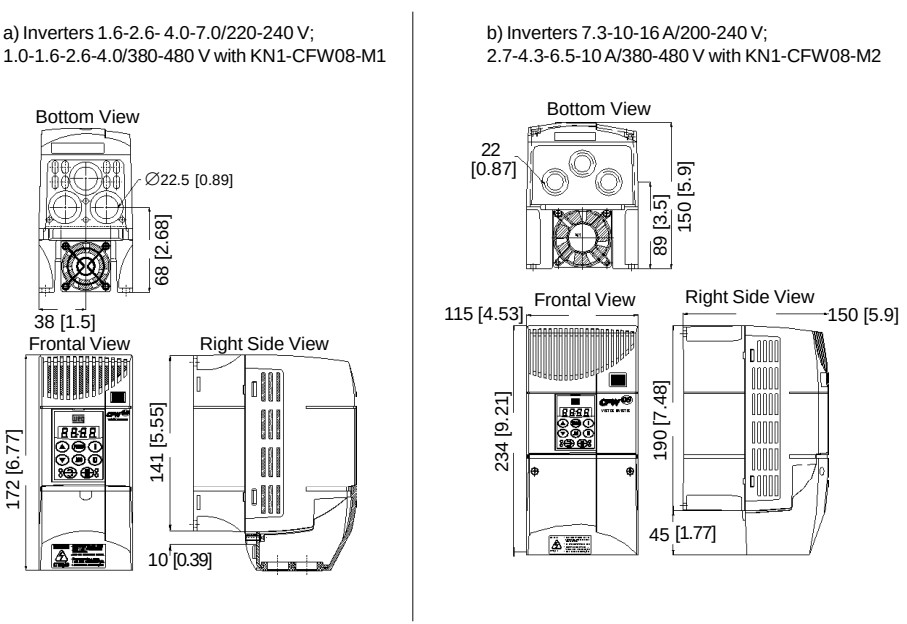

Figure 8.27 a) and b) *- External dimensions in mm [in] of the inverter with Nema 1/IP20 kit*

8.20 RFI FILTER

The installation of frequency inverters requires some care in order to prevent electromagnetic interferences (EMI).
This electromagnetic interference may disturb the operation of the inverter itself or other devices, such as electronic sensors, PLCs, transducers, radio equipment, etc. installed in the proximity.
To avoid these troubles, follow the installation instructions contained in this manual.
In these cases, avoid the installation of electromagnetic noise generating circuits, such as power cables, motors, etc. near to signal or control cables.
Care should also be taken with the radiated interference, by shielding the cables and the circuits that tend to emit electromagnetic waves and can cause interference.
The electromagnetic interference can also be transmitted through power supply line. This type of interference is minimized in the most cases by capacitive filters which are already installed inside the CFW-08.
However, when inverters are installed in residential areas, the installation of additional filter may be required.
These filters may be installed internally (on some types) or externally.
As defined in standards, the Category C1 filter has more attenuation capacity than the Category C2 filter , thus being more suitable for residential areas.
Item 8.1 lists the available RFI filters with the respective inverter models.
The inverters with internal Category C2 filters have the same external dimensions as the inverters without filter.
The external Category C1 filters must be installed between the power supply line and the inverter input, as shown in figure 8.28.
Instructions for the RFI filter installation:

- ☑ Install the inverter and the filter on a metallic grounded plate as near to each other as possible and ensure a good electrical contact between the grounded plate and the inverter and filter frames.
- ☑ For motor connection use a shielded cable or individual cables inside a grounded metallic conduit.

NOTE!
For installations that must meet the European standards refer to item 3.3.

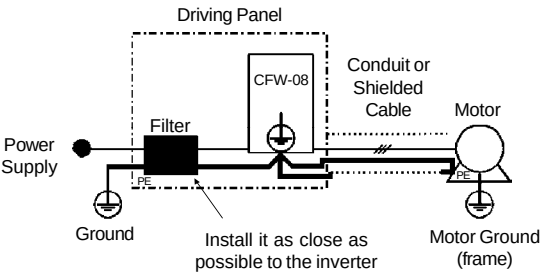

Figure 8.28 *- Connection of the external RFI filter - Category C1*

8.21 LINE REACTOR

Due to the input circuit characteristic, common to the most inverters available on the market, consisting of a diode rectifier and a capacitor bank, the input current (drained from the power supply line) of inverters is a non sinusoidal waveform and contains harmonics of the fundamental frequency (frequency of the power supply - 60 Hz or 50 Hz).

These harmonic currents circulate through the power supply line and cause harmonic voltage drops which distort the power supply voltage of the inverter and other loads connected to this line. These harmonic currents and voltage distortions may increase the electrical losses in the installation, overheating the components (cables, transformers, capacitor banks, motors, etc.), as well as lowering the power factor.

The input current harmonics are determined by the value of the impedances present at the input circuit.

The installation of a line reactor reduces the harmonic content of the input current, providing the following advantages:

- ☑ Increasing the input power factor.
- ☑ Reduction of the RMS input current.
- ☑ Reduction of the power supply voltage distortion.
- ☑ Increasing the life of the DC link capacitors.

8.21.1 Application Criteria

In a general manner, the CFW-08 series inverters can be connected directly to the power supply line without line reactors. But in this case, ensure the following:

- ☑ To ensure the inverter expected life, a minimum line impedance that introduces a voltage drop as shown in table 8.3, as a function of the motor load, is recommended. If the line impedance (transformers and wirings) is lower than these values, it is recommended to use line reactor(s).
- ☑ When it is necessary to add a line reactor to the system, it is recommended to size it considering a 2 % to 4 % voltage drop (for nominal output current). This pratice results in a compromise between motor voltage drop, power factor improvement and harmonic current distortion reduction.
  This practice results in a compromise between motor voltage drop, power factor improvement and harmonic current distortion reduction.

- ☑ Always add a line reactor when capacitors for power factor correction are installed in the same line and near to the inverter.
- ☑ Figure 8.29 shows the line reactor connection to the input.
- ☑ Use the following equation to calculate the value of the line reactor necessary to obtain the desired percentage of the voltage drop:

$$L = 1592 \times \frac{\Delta V}{f} \times \frac{V_e}{I_{S,\,nom}} \; [\mu H]$$

where:

ΔV - desired line voltage drop, in percentage (%);

V_e - phase voltage at inverter input (line voltage), given in Volts (V);

$I_{s,nom}$ - rated inverter output current;

f - line frequency.

Model	Minimum Line Impedance		
	With Rated Load at the Inverter Output ($I_S = I_{S,nom}$)	With 80 % of the Rated Load ($I_S = 0.8I_{S,nom}$)	With 50 % of the Rated Load ($I_S = 0.5I_{S,nom}$)
1.6 A / 200-240 V	0.25 %	0.1 %	0.05 %
2.6 A / 200-240 V	0.1 %	0.05 %	
4.0 A / 200-240 V	1.0 %	0.5 %	
7.0 A / 200-240 V	0.5 %	0.25 %	
7.3 A / 200-240 V	1.0 %	0.25 %	
10 A / 200-240 V	0.5 %	0.25 %	
16 A / 200-240 V	1.0 %	0.5 %	
22 A/200-240 V	2.0 %	1.0 %	
28 A/200-240 V	1.0 %	0.5 %	
33 A/200-240 V	1.0 %	0.5 %	
1.0 A / 380-480 V	0.05 %	0.05 %	
1.6 A / 380-480 V	0.05 %	0.05 %	
2.6 A / 380-480 V	0.1 %	0.05 %	
2.7 A / 380-480 V	0.25 %	0.1 %	
4.0 A / 380-480 V	1.0 %	0.5 %	
4.3 A / 380-480 V	1.0 %	0.5 %	
6.5 A / 380-480 V	0.5 %	0.25 %	
10 A / 380-480 V	0.5 %	0.25 %	
13 A / 380-480 V	0.5 %	0.25 %	
16 A / 380-480 V	1.0 %	0.5 %	
24 A/380-480 V	1.0 %	0.5 %	
30 A/380-480 V	1.0 %	0.5 %	

Note: These values ensure a life of 20,000 hour for the DC link capacitors, i.e., they can be operated during 5 years with operation of 12 hours per day.

Table 8.3 *- Minimum network impedance for several load conditions*

a) Single-phase power supply models

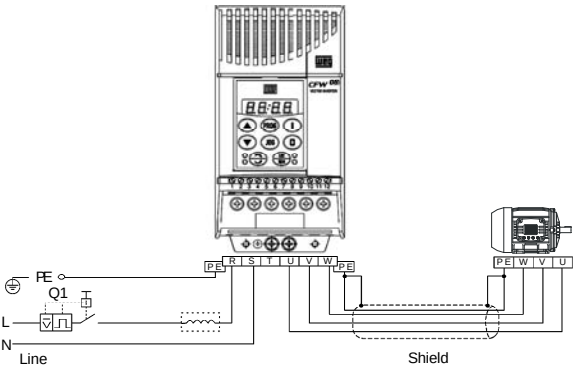

Figure 8.29 a) *- Power connection with line reactor at the input*

b) Three-phase power supply models

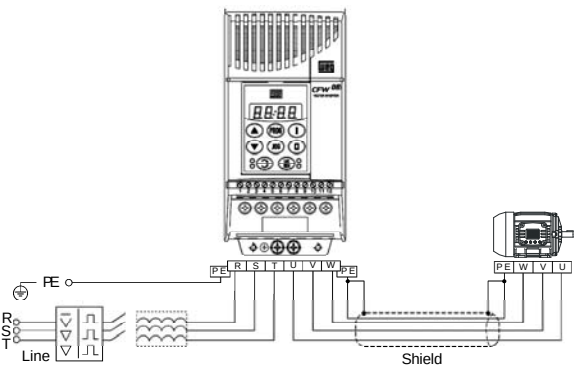

Figure 8.29 b) *- Power connection with line reactor at the input*

☑ As an alternative criterion, we recommend to add a line reactor always the transformer that supplies the inverter has rated power higher than indicated in table 8.4.

Inverter Model	Transformer Apparent Power [kVA]
1.6 A and 2.6 A/200-240 V	30 x rated inverter apparent power [kVA]
4 A/200-240 V	6 x rated inverter apparent power [kVA]
7 A and 7.3 A/200-240 V	10 x rated inverter apparent power [kVA]
10 A/200-240 V	7.5 x rated inverter apparent power [kVA]
16-22-28 A and 33 A/200-240 V	4 x rated inverter apparent power [kVA]
1 A-1.6 A and 2.6 A/380-480 V	30 x rated inverter apparent power [kVA]
4.0 A and 4.3 A/380-480 V	6 x rated inverter apparent power [kVA]
2.7 A/380-480 V	15 x rated inverter apparent power [kVA]
6.5-10 A and 13 A/380-480 V	7.5 x rated inverter apparent power [kVA]
16-24 A and 30 A/380-480 V	4 x rated inverter apparent power [kVA]

Note: The value for the rated apparent power can be obtained in item 9.1 of this manual.

Table 8.4 *- Alternative criteria for use of line reactor - maximum values of the transformer power*

8.22 LOAD REACTOR

The use of a three-phase load reactor, with an approximate 2 % voltage drop, adds an inductance at the inverter PWM output to the motor. This decreases the dV/dt (voltage rising rate) of the pulses generated at the inverter output. This practice reduces the voltage spikes on the motor windings and the leakage currents that may be generated when long cables between inverter and motor (as a function of the "transmission line" effect) are used.

There are many factors that influence the peak level (Vp) and the rise time (tr) of voltage spikes: cable type, cable length, motor size, switching frequency and so on.

WEG recommends using a load reactor when the supply voltage is higher than 500 V, though this is not always required. WEG, as a specialist in both motors and inverters (VSDs) is able to provide an integrated solution.

The load reactor value is calculated in the same way as the line reactor (refer to item 8.21.1).

If the cables between inverter and motor are longer that 100 m (300 ft), the cable capacitance to ground may cause nuisance overcurrent (E00) trips. In this case it is also recommended to use a load reactor.

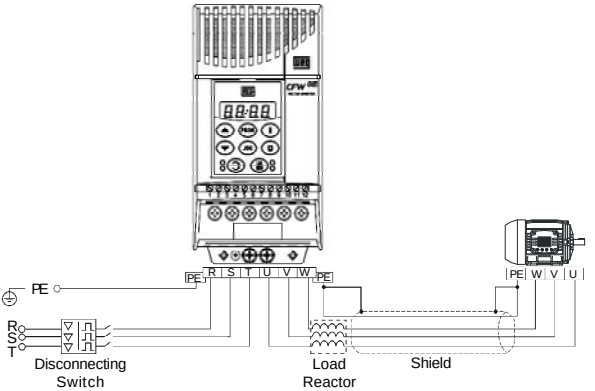

Figure 8.30 *- Load reactor connection*

8.23 DYNAMIC BRAKING

The dynamic braking is used where short deceleration times are required or where high inertia is present.
For the correct sizing of the braking resistor, application data such as, deceleration time, load inertia, braking duty cycle must be considered.
In any case, the rms current capacity and the maximum peak current must be considered.
The maximum peak current defines the minimum permitted ohmic value for the braking resistor. Refer to table 8.5.
The DC link voltage level for the actuation of the dynamic braking is as follows:

Inverters supplied with 200 V to 240 V: **375 Vdc**
Inverters supplied with 380 V to 480 V: **750 Vdc**

8.23.1 Resistor Sizing

The braking torque, that can be obtained through the frequency inverter, without using the dynamic braking module, varies from 10 % to 35 % of the rated motor torque.
During the deceleration process, the kinetic energy of the load is regenerated into the inverter DC link. This energy loads up the capacitors by increasing the DC link voltage. When this energy is not fully dissipated, it may generate a DC link overvoltage trip (E01) and disabling the inverter.
To obtain higher braking torques, the use of dynamic braking is recommended where the excess of the regenerated energy is dissipated in a resistor mounted externally to the inverter.
The braking resistor is defined according to the deceleration time, load inertia and resistive torque.
In most cases, a resistor with an ohmic value as indicated on the table below and a power rating of 20 % of the driven motor can be used.
Use wire type or tape type resistors with suitable insulation to withstand the instantaneous current peaks.

For critical applications with very short braking times, high inertia loads (ex.: centrifuges) or with very short and frequent duty cycles, contact WEG to define the most suitable resistor.

Inverter Model	Maximum Braking Current	P_{max} (Maximum Resistor Power)	RMS Braking Current (*)	P_{rated} (Rated Resistor Power)	Recommended Resistor	Recommended Wiring
1.6 A / 200-240 V	Braking not available					
2.6 A / 200-240 V						
4.0 A / 200-240 V						
7.0 A / 200-240 V						
7.3 A / 200-240 V	10 A	3.9 kW	5 A	0.98 kW	39 Ω	2.5 mm² / 14 AWG
10 A / 200-240 V	15 A	6.1 kW	7 A	1.3 kW	27 Ω	2.5 mm² / 14 AWG
16 A / 200-240 V	20 A	8.8 kW	10 A	2.2 kW	22 Ω	4 mm² / 12 AWG
22 A / 200-240 V	26 A	10.1 kW	13 A	2.5 kW	15 Ω	6 mm² / 10 AWG
28 A / 200-240 V	26 A	10.1 kW	18 A	3.2 kW	15 Ω	6 mm² / 10 AWG
33 A / 200-240 V	38 A	14.4 kW	18 A	3.2 kW	10 Ω	6 mm² / 10 AWG
1.0 A / 380-480 V	Braking not available					
1.6 A / 380-480 V						
2.6 A / 380-480 V						
2.7 A / 380-480 V	6 A	4.6 kW	3.5 A	1.6 kW	127 Ω	1.5 mm² / 16 AWG
4.0 A / 380-480 V	Braking not available					
4.3 A / 380-480 V	6 A	4.6 kW	3.5 A	1.6 kW	127 Ω	1.5 mm² / 16 AWG
6.5 A / 380-480 V	8 A	6.4 kW	4 A	1.6 kW	100 Ω	2.5 mm² / 14 AWG
10 A / 380-480 V	16 A	12 kW	10 A	4.7 kW	47 Ω	4 mm² / 12 AWG
13 A / 380-480 V	24 A	19 kW	14 A	6.5 kW	33 Ω	6 mm² / 10 AWG
16 A / 380-480 V	24 A	19 kW	14 A	6.5 kW	33 Ω	6 mm² / 10 AWG
24 A / 380-480 V	35 A	27 kW	21 A	7.9 kW	22 Ω	6 mm² / 10 AWG
30 A / 380-480 V	43 A	33 kW	27 A	10.9 kW	18 Ω	6 mm² / 10 AWG

(*) The rms braking current can be determined by:

$$I_{rms} = I_{max} \cdot \sqrt{\frac{t_{br}^{[min]}}{5}}$$

where t_{br} corresponds to the sum of the braking times during the most severe 5 minute cycle.

Table 8.5 *- Recommended braking resistors*

8.23.2 Installation

- ☑ Connect the braking resistor between the +UD and BR power terminals (refer to item 3.2.1).
- ☑ Make this connection with a twisted pair. Separate this cable from any signal or control wire. Size the cable cross section according to the application, by considering the maximum current and the rms current.
- ☑ If the braking resistor is installed inside the inverter panel, consider the heat dissipated by the resistor when defining the panel ventilation.

DANGER!
The internal inverter braking circuit and the braking resistor can be damaged when not correctly sized or when the line voltage exceeds the maximum allowed value.
In this case, the only guaranteed method to avoid burning the braking resistor and eliminate risk of fire is the installation of a thermal overload relay in series connected with the resistor and/or the installation of a thermostat on the resistor body, wiring it in such a way that it disconnects the inverter power supply in case of overheating, as shown in figure 8.31:

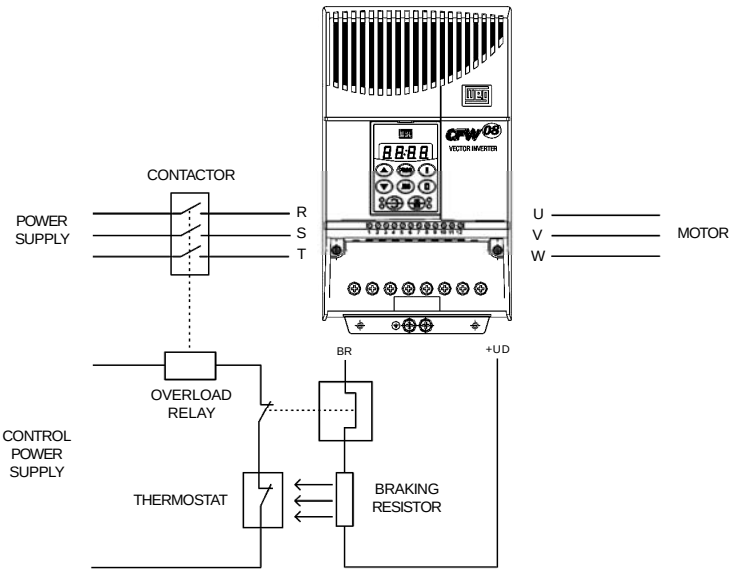

Figure 8.31 *- Braking resistor connection*
(only for models 7.3-10-16 A/200-240 V and 2.7-4.3-6.5-10-13-16 A/380-480 V)

8.24 SERIAL COMMUNICATION

8.24.1 Introduction

The basic objective of the serial communication is the physical connection of the inverters in an equipment network configured as follows:

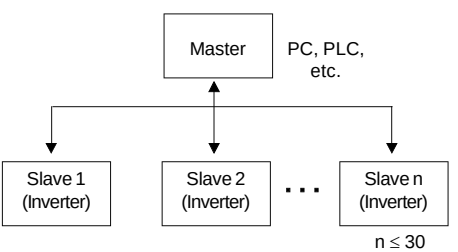

The inverters have a control software for data transmission/ reception through serial interface, thus facilitating the reception of data that have been sent by the master and the transmission of the data requested by the master.
This software supports WEG protocol and nine different Modbus-RTU modes, that can be selected via parameter P312. The subjects broached in this item refers to WEG protocol. For more details about the Modbus-RTU, refer to item 8.25.
The transfer rate is 9600 bits/s, following an exchange protocol of question/answer type by using ASCII characters.

The master is able to realize the following operations related to each inverter:

- IDENTIFICATION
- ☑ network address;
- ☑ inverter;
- ☑ software version.

- CONTROL
- ☑ general enabling/disabling;
- ☑ enabling/disabling by ramp;
- ☑ direction of rotation;
- ☑ frequency/speed reference;
- ☑ local/remote;
- ☑ JOG;
- ☑ error and fault RESET.

- STATUS RECOGNITION
- ☑ ready;
- ☑ Sub;
- ☑ run;
- ☑ local/remote;
- ☑ error;
- ☑ JOG;
- ☑ direction of rotation.

- PARAMETER READING

- CHANGE OF PARAMETERS

Typical examples of network use:
- ☑ PC (master) for the parametrization of one or several inverters at the same time;
- ☑ SDCD monitoring inverter variables;
- ☑ PLC controlling the operation of one or more inverters in a industrial process.

8.24.2 RS-485 and RS-232 Interfaces Description

The physical connection between the inverters and the master is performed according to one of the standards below:
a. RS-232 (point to point up to 10 m (32.8 ft)).
b. RS-485 (multipoint, galvanic isolation, up to 1000 m (3280.8 ft)).

8.24.2.1 RS-485

This interface permits the linkage of up to 30 inverters to a master (PC, PLC, etc.), attributing and setting for each inverter an address (1 to 30). In addition to these 30 addresses, there are two addresses to perform special tasks:

- ☑ **Address 0:** any inverter in the network is inquired, independently of its address. Only one inverter can be connected to the network (point to point) in order to prevent short-circuits in the line interface.
- ☑ **Address 31:** a control can be transmitted to all inverters in the network simultaneously, without acceptance recognition.
- ☑ List of addresses and corresponding ASCII characters:

ADDRESS (P308)	ASCII		
	CHAR	DEC	HEX
0	@	64	40
1	A	65	41
2	B	66	42
3	C	67	43
4	D	68	44
5	E	69	45
6	F	70	46
7	G	71	47
8	H	72	48
9	I	73	49
10	J	74	4A
11	K	75	4B
12	L	76	4C
13	M	77	4D
14	N	78	4E
15	O	79	4F
16	P	80	50
17	Q	81	51
18	R	82	52
19	S	83	53
20	T	84	54
21	U	85	55
22	V	86	56
23	W	87	57
24	X	88	58
25	Y	89	59
26	Z	90	5A
27	]	91	5B
28	\	92	5C
29	[	93	5D
30	^	94	5E
31	_	95	5F

Table 8.6 *- Adresses and corresponding ASCII characters list*

Other ASCII characters used by the protocol:

ASCII		
CODE	DEC	HEX
0	48	30
1	49	31
2	50	32
3	51	33
4	52	34
5	53	35
6	54	36
7	55	37
8	56	38
9	57	39
=	61	3D
STX	02	02
ETX	03	03
EOT	04	04
ENQ	05	05
ACK	06	06
NAK	21	15

Table 8.7 *- Others ASCII characters used by the protocol*

The connection between the network participants is performed through a pair of wires. The signal levels are according to the EIA RS-485 STANDARD with differential receivers and transmitters. You must use the serial communication module KRS-485-CFW08 (refer to item 8.13).
When the master is fitted only with a RS-232 serial interface, you must apply a level conversion module from RS-232 to RS-485.

8.24.2.2 RS-232

In this case we have the connection of a master to an inverter (point to point). The data can be exchanged in a bi-directional way, but not simultaneously (HALF DUPLEX).
The logical levels meet the EIA RS-232C STANDARD, that specifies the use of balanced signals. In this case one wire is used for the transmission (TX), one wire for the reception (RX) and one wire for the return (0 V).This configuration is a three wire economy model.
You must use the RS-232 (KCS-CFW08) module in the inverter (refer to item 8.11).

8.24.3 Definitions

The items of this section describe the protocol used in the serial communication.

8.24.3.1 Used Terms

- ☑ Parameters: are those existing in the inverters whose visualization or alteration is possible through the keypad (HMI) interface.
- ☑ Variables: are values that have specific functions in the inverter and that can be read and, in some cases, modified by the master.

☑ Basic variables: are those that can be accessed only through the serial interface.

SCHEMATIC DIAGRAM:

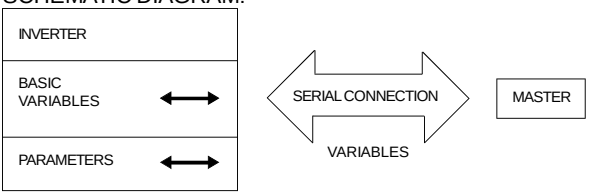

8.24.3.2 Parameter/ Variables Resolution

The variables and the parameters have 16 bits format, i. e., from -32767 to +32768 for signed variables or from 0 to 65535 for unsigned variables.
All variables are considered as signed variables, except those related to time (time, period, frequency).
In addition, the maximum and minimum values must consider the parameter range limits.
The table below shows the main variables and their respective resolutions.

Variable	Unit	Resolution
Frequency	Hz	0.01 Hz/unit
Current (AC or DC)	A	0.01 A/unit
Voltage (AC or DC)	V	1 V/unit
Time	s	0.1 s/unit
Percentage	%	0.01 %/unit
Gain	-	0.01/unit
rpm	rpm	1 rpm/unit

Table 8.8 *- Serial communication resolutions*

8.24.3.3 Character Format

☑ 1 start bit;
☑ 8 information bits [they codify text characters and transmission characters, removed from the 7 bits code, according to ISO 646 and complemented for the even parity (eighth bit)];
☑ 1 stop bit.

After the start bit, follows the less significant bit:

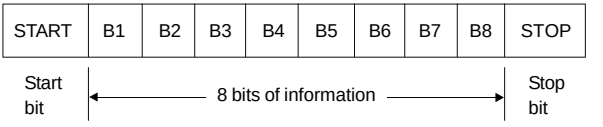

8.24.3.4 Protocol

The transmission protocol meets the Standard ISO 1745 for the transmission in code.
Only text character sequences without headers are used. The error/fault monitoring is made through transmission related to the parity of the individual 7 bit characters, according to ISO 646. The parity monitoring is made according to DIN 66219 (even parity). The master uses two types of messages:

- ☑ **Reading message:** for inquiring of the inverter variable content;
- ☑ **Writing message:** to change the inverter variable content or to send comands to the inverters.

Note: No transmission between two inverters is possible. The master has the bus access control.

Reading message:

This message allows the master to receive from the inverter the content corresponding to the inquiry code. In the answer message, the inverter transmits the data requested by the master and it finishes the transmission with EOT.

1) Master:

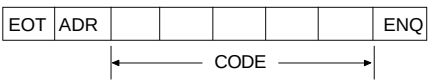

2) Inverter:

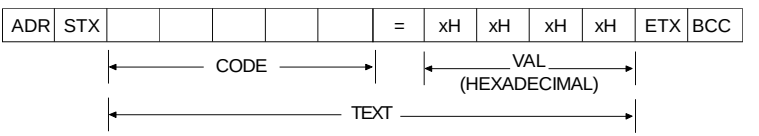

3) Master:

Format of the reading message:

EOT: control character of End Of Transmission;
ADR: inverter address (ASCII@, A, B, C, a) (ADdRess);
CODE: address of the 5-digit variable coded in ASCII;
ENQ: control character ENQuiry (enquiry).

Format of the inverter answer message:

ADR: 1 character - inverter address;
STX: control character - Start of TeXt;
TEXT: consists in:
- ☑ **CODE:** address of the variable;
- ☑ **" = ":** separation character;
- ☑ **VAL:** 4 digits value HEXADECIMAL;

ETX: control character - End of Text;
BCC: CheCksum Byte - EXCLUSIVE OR of all bytes between STX (excluded) and ETX (included).

NOTE!
In some cases there can be an inverter answer with:

ADR	NAK

Refer to the item 8.24.3.5.

Writing message

This message sends data to the inverter variables. The inverter will answer by indicating if the data have been accepted or not.

1) Master:

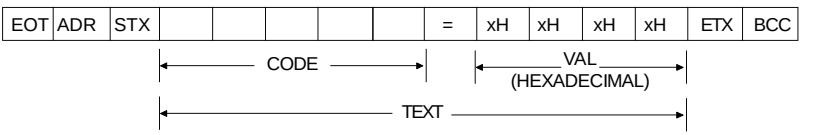

2) Inverter:

ADR	NAK	or	ADR	ACK

3) Master:

EOT

Format of the writing message:

EOT: control character of End Of Transmission;
ADR: inverter address;
STX: control character - Start of TeXt;
TEXT: consists in:
☑ **CODE:** variable address;
☑ **" = ":** separation character;
☑ **VAL:** 4 HEXADECIMAL digit values;
ETX: control character - End of TeXt;
BCC: CheCksum Byte - EXCLUSIVE OR of all the bytes between STX (excluded) and ETX (included).

Format of the inverter answer message:

Acceptance:
☑ **ADR:** inverter address.
☑ **ACK:** ACKnowledge control character.
Without acceptance:
☑ **ADR:** inverter address.
☑ **NAK:** Not AcKnowledge control character.
This means that the data were not accepted and the addressed variable continues with its old value.

8.24.3.5 Execution and Message Test

The inverter and the master test the message syntax.
The answers for the respective verified conditions are defined as follows:

Reading message:

- ☑ No answer: with wrong message structure, control characters received incorrectly or wrong inverter address;
- ☑ **NAK:** Code corresponding to a non existing variable or there is only a writing variable;
- ☑ **TEXT:** with valid messages.

Writing message:

- ☑ No answer: with wrong message structure, control characters received incorrectly or wrong inverter address;
- ☑ **NAK**: Code corresponding to a non existing variable, wrong BCC (checksum byte), only reading variable, VAL out of the allowed range for the respective variable, operation parameter out of the alteration mode;
- ☑ **ACK**: with valid message.

The master should maintain, between two variable transmissions to the same inverter, a waiting time that is compatible with the used inverter.

8.24.3.6 Message Sequence

The messages are processed in the inverter in determined intervals of time.
Therefore, a pause larger than the sum of the times T_{proc} + T_{di} + T_{txi} should be ensured between two messages addressed to the same inverter (refer to item 8.24.6).

8.24.3.7 Variable Code

The field designated with CODE determines the parameter address and the basic variables formed by 5 digits (ASCII characters) as follows:

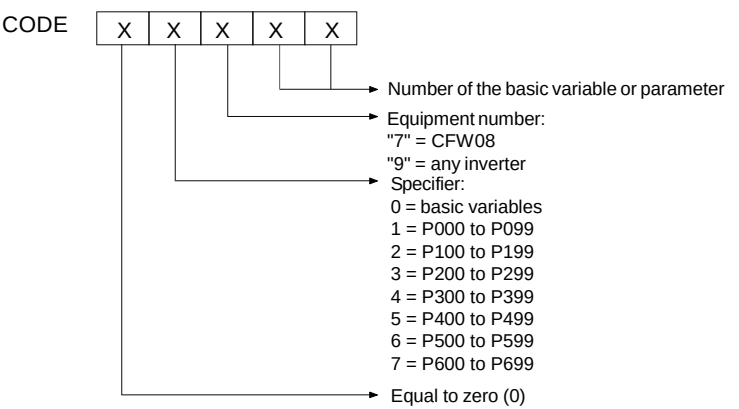

8.24.4 Message Examples

☑ Change of the minimum frequency (P133) to 6.00 Hz in the inverter 7.

1) Master:

EOT	G	STX	0	2	7	3	3	=	0H	2H	5H	8H	ETX	BCC

addr. 7

F_{min}

F_{min} = 258H = 600 = 6.00/0.01

2) Inverter:

G	ACK

3) Master:

EOT

☑ Reading of the output current from the inverter 10
(supposing that the same was at 7.8 A at the moment of the enquiry).

1) Master:

EOT	J	0	1	7	0	3	ENQ

addr.10

P003 Code

2) Inverter:

J	STX	0	1	7	0	3	=	0H	3H	0H	CH	ETX	BCC

addr.10

P003 Code

P003 = 30CH = 780 = 7.8/0.01

3) Master:

EOT

8.24.5 Variables and Errors of the Serial Communication

8.24.5.1 Basic Variables

V00 (code 00700)
Indication of the inverter model (reading variable):
The reading of this variable permits the identification of the inverter type. For the CFW-08 this value is 7, as defined in 8.24.3.7.

V02 (code 00702)
Indication of the inverter status (reading variable):
☑ Logical status (byte-high).
☑ Error code (byte-low).

Where:

Logical status:

EL15	EL14	EL13	EL12	EL11	EL10	EL9	EL8

EL8: 0 = ramp enabling (start/stop) inactive
1 = ramp enabling active

EL9: 0 = general enabling inactive
1 = general enabling active

} Inverter enabled EL8 = EL9 = 1

EL10: 0 = reverse
1 = forward

EL11: 0 = JOG inactive
1 = JOG active

EL12 0 = local
1 = remote

EL13: 0 = without undervoltage
1 = with undervoltage

EL14 : not used

EL15: 0 = without error
1 = with error

Error code: hexadecimal error number
Ex.: E00 → 00H
E01 → 01H
E10 → 0AH

V03 (code 00703)
Selection of the logical control:
Writing variable, whose bits have the following meaning:

BYTE HIGH: desired action mask. It order to enable the action, the corresponding bit should be set to 1.

CL15	CL14	CL13	CL12	CL11	CL10	CL9	CL8
MSB							LSB

- ☑ CL8: 1 = enabling ramp (start/stop)
- ☑ CL9: 1 = general enabling
- ☑ CL10: 1 = forward/reverse rotation
- ☑ CL11: 1 = JOG
- ☑ CL12: 1 = local/remote
- ☑ CL13: not used
- ☑ CL14: not used
- ☑ CL15: 1 = inverter “RESET”

BYTE LOW: logical level of the desired action.

CL7	CL6	CL5	CL4	CL3	CL2	CL1	CL0

MSB LSB

- ☑ CL0: 1 = enabling (run)
  0 = disabling by ramp (stop)
- ☑ CL1: 1 = enabling
  0 = general disabling (stops by inertia)
- ☑ CL2: 1 = forward
  0 = reverse
- ☑ CL3: 1 = JOG active
  0 = JOG inactive
- ☑ CL4: 1 = remote
  0 = local
- ☑ CL5: not used
- ☑ CL6: not used
- ☑ CL7: the transition in this bit from 0 to 1 causes the inverter "RESET" when any error condition is present

Notes:

- ☑ Disabling via DIx has priority over these disabling.
- ☑ To disable the inverter via serial interface, set CL0 = CL1 = CL8 = CL9 = 1, while the external disabling (example, via DI) must be inactive.
- ☑ If CL1 = 0 and CL9 = 1, it will occur general disabling.
- ☑ If CL0 = 0 and CL8 = 1, the inverter will be disabled by ramp.

V04 (code 00704)
Frequency reference given by the Serial interface (reading/writing variable):
Allows to send the frequency reference to the inverter, when P221 = 5 in local mode and P222 = 5 in remote mode. The variable resolution is shown in the item 8.24.3.2.

V05 (code 00705)
Enabled controls to the Serial interface (reading variable):

CHSH 0	CHSL 7	CHSL 6	CHSL 5	CHSL 4	CHSL 3	CHSL 2	CHSL 1	CHSL 0

MSB LSB

- ☑ CHSL0: 1 - serial local reference
- ☑ CHSL1: 1 - serial local forward/reverse selection
- ☑ CHSL2: 1 - serial local On/Off selection
- ☑ CHSL3: 1 - serial local JOG
- ☑ CHSL4: 1 - serial remote reference
- ☑ CHSL5: 1 - serial remote forward/reverse selection
- ☑ CHSL6: 1 - serial remote On/Off selection
- ☑ CHSL7: 1 - serial remote JOG selection
- ☑ CHSH0: 1 - serial local/remote selection.

8.24.5.2 Message Examples with Basic Variables

☑ Inverter enabling (provided P229 = 2 for LOC or P230 = 2 for REM).

1) Master:

EOT	G	STX	0	0	7	0	3	=	0H	3H	0H	3H	ETX	BCC

addr. 7

C. L. Code

general enabling = 1
ramp enabling = 1

2) Inverter:

G	ACK

3) Master:

EOT

☑ Changing inverter from forward to reverse (provided P229 = 2 for LOC or P230 = 2 for REM) - if P231 = 2.

1) Master:

EOT	G	STX	0	0	7	0	3	=	0H	4H	0H	0H	ETX	BCC

addr. 7

C. L. Code

Reverse = 0

2) Inverter:

G	ACK

3) Master:

EOT

☑ JOG enabling (provided P229 = 2 for LOC or P230 = 2 for REM).

1) Master:

EOT	G	STX	0	0	7	0	3	=	0H	8H	0H	8H	ETX	BCC

C. L. Code → JOG active = 1

addr. 7

2) Inverter:

G	ACK

3) Master:

EOT

☑ Error reset

1) Master:

EOT	G	STX	0	0	7	0	3	=	8H	0H	8H	0H	ETX	BCC

C. L. Code → RESET = 1

addr. 7

2) Inverter:

G	ACK

3) Master:

EOT

8.24.5.3 Parameters Related to the Serial Communication

Parameter Number	Parameter Description
P220	Local/Remote Selection
P221	Local Reference Selection
P222	Remote Reference Selection
P229	Local Command Selection
P230	Remote Command Selection
P231	Forward/Reverse Selection
P308	Inverter address on the Serial Communication Network (value range from 1 to 30)
P312	Serial Interface Protocol
P313	Serial Interface Watchdog Action
P314	Serial Interface Watchdog Timeout

Table 8.9 *- Parameters related to the Serial communication*

For further information about the parameter above, refer to chapter 6 - Detailed Parameter Description.

8.24.5.4 Errors Related to the Serial Communication

They act as follows:
- ☑ They do not disable the inverter;
- ☑ They do not disable the fault relay;
- ☑ They inform in the word of logical status (V02).

Fault types:
- ☑ E22: longitudinal parity fault (BCC);
- ☑ E24: parametrization fault (when some of the situations indicated in table 4.1 occur (incompatibility between parameters) or when there is a parameter change attempt that can not be changed with the motor running).
- ☑ E25: variable or parameter not existing;
- ☑ E26: expected values out of allowed limits;
- ☑ E27: writing attempt in a read only variable or logical command disabled;
- ☑ E28: serial interface watchdog timeout error.

Note:
If a parity fault is detected during inverter data reception, the message will be ignored. The same happens when syntax errors occur.
Ex.:
- ☑ Code values different from the numbers 0 to 9;
- ☑ Separation character different from " = ", etc.

8.24.6 Time for Read/Write of Messages

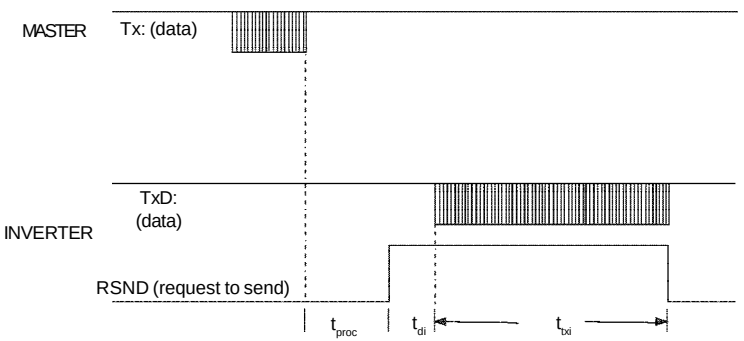

Times (ms)		Typical
T_{proc}		10
T_{di}		2
T_{bxi}	reading	15
	writing	3

8.24.7 Physical Connection RS-232 and RS-485

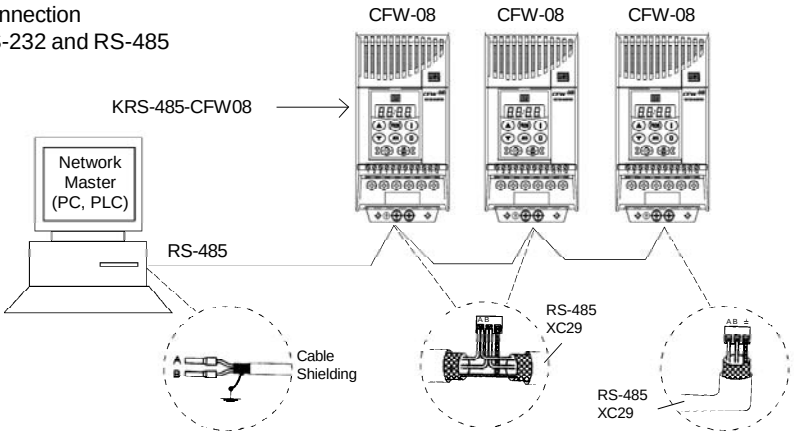

Figure 8.32 *- CFW-08 network connection through RS-485 serial interface*

Notes:

- ☑ Line termination: connect the termination resistors at the ends of the line.
- ☑ Grounding of the cable shield: connect the shielding to the equipment frame (suitable grounding);
- ☑ Recommended cable: for balanced shielding. Ex.: AFS series, manufacturer KMP.

Figure below shows the pin position of the XC8 connector of the KCS-CFW08-S module.

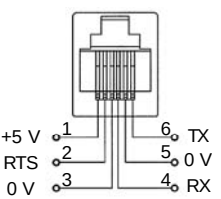

Figure 8.33 *- Description of the XC8 (RJ-6) connector*

NOTE!
The wiring of the RS-232 must be laid separately from the power cables and the control wiring in 110 V/220 V.

NOTE!
You can not use RS-232 and RS-485 simultaneously.

8.25 MODBUS-RTU

8.25.1 Introduction to Modbus-RTU Protocol

Modbus protocol has been developed 1979 firstly. Currently it is a wide diffused open protocol, used by several manufacturers in different equipment. The Modbus-RTU communication of the do CFW-08 has been developed by considering two documents:

1. MODBUS Protocol Reference Guide Rev. J, MODICON, June 1996.
2. MODBUS Application Protocol Specification, MODBUS.ORG, may 8th 2002.

In these documents are defined the format of the messages used by the elements that are part of the Modbus network, the services (or functions) that can be made available via network, and also how these elements exchange the data on the network.

8.25.1.1 Transmission Modes

Two transmission modes are defined in the protocol definition: ASCII and RTU. The transmission modes define the form how the message bytes are transmitted. It is not permitted to use the two transmission modes on the same network.
In the RTU mode each transmitted word has one start bit, eight data bits, 1 parity bit (optional) and 1 stop bit (2 stop bits, if no parity bit is used). Thus the bit sequence for the transmission of 1 byte is as follows:

Start	B0	B1	B2	B3	B4	B5	B6	B7	Parity or Stop	Stop

In the RTU mode, each data byte is transmitted as being a single word with its value directly in hexadecimal. The CFW-08 uses only this transmission mode, not having therefore, communication in ASCII mode.

8.25.1.2 Message Structure in RTU Mode

The Modbus RTU network operates in Master-Slave system and it can consist of up to 247 slaves but only one Master. The master always initiates the communication with a question to a slave and the slave answers the question. Both messages (question and answer) have the same structure: Address, Function Code, Data and CRC. Depending on what is being requested, only the data field has variable length.

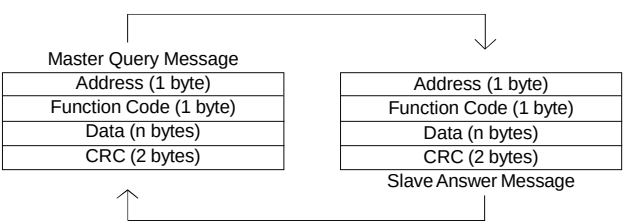

Figure 8.34 *- Message structure*

Address:
The master initiates the communication by sending one byte with the address of the slave to which the message is addressed. The slave initiates the message with its own address. The master can also send a message destined to address 0 (zero), which means that the message is destined to all network slaves (broadcast). In this case no slave will answer to the master.

Function code:
This field contains an only byte, where the master specifies the type of service or the function requested to the slave (read, write, etc.). According to the protocol, each function is used to access a specific data type. In the CFW-08 all data are available as holding type registers (referenced from the address 40000 or '4x'). Besides these registers, the inverter status (enabled/disabled, with error/no error, etc) and the command for the inverter (run/stop, run FWD/REV, etc.) can also be accessed through the coils read/write functions or the internal bits (referenced from the address 00000 or '0x' on).

Data field:
This field has variable length. The format and the content of this field depend on the used function and transmitted values. This field and the respective functions are described in item 8.25.3.

CRC:
The last part of the message is the field for checking the transmission errors. The used method is the CRC-16 (Cycling Redundancy Check). This field is formed by two bytes, where the least significant byte (CRC-) is transmitted first and only then the most significant byte is transmitted (CRC+).
CRC calculation is started by loading a 16-bit variable (mentioned from now on as CRC variable) with FFFFh value. Then following steps are executed with the following routine:

1. The first message byte (only the data bits - the start bit, parity bit and stop bit are not used) is submitted to the XOR logic (OR exclusive) with the 8 least significant bits of the CRC variable, returning the result to the CRC variable,
2. Then the CRC variable is displaced one position to the right, in the direction of the least significant bit and the position of the most significant bit is filled out with zero 0 (zero).
3. After this displacement, the flag bit (bit that has been displaced out the CRC variable) is analyzed, by considering the following:
   - ☑ If the bit value is 0 (zero), no change is made.
   - ☑ If the bit value is 1, the CRC variable content is submitted to XOR logic with a constant A001h value and the value is returned to the CRC variable.

4. Repeat steps 2 and 3 until the eight displacements have been realized.
5. Repeat the steps 1 to 4, by using the next byte message until the whole message have been processed.

The end content of the CRC variable is the value of the CRC field that is transmitted at the end of the message. The least significant part is transmitted first (CRC), only then the most significant part (CRC+) is transmitted.

Times between messages:
In the RTU mode there is no specific character that indicates the beginning or the end of a message. Thus the only indication for the beginning or the end of a new message is the data transmission absence in the network by a minimum time of 3.5 times the time required for transmission of one data word (11 bits). Thus if a message is initiated after elapsing of the minimum time required without transmission, the network elements assume that the received character represents the beginning of a new message. In similar mode, after this time has elapsed, the network elements will assume that the message has been ended.

If during the transmission of a message, the time between the bytes is longer than this minimum required time, the message will be considered invalid, since the inverter will discard the already received bytes and will mount a new message with the bytes that are being transmitted.
The table below shows the time for three different communication rates.

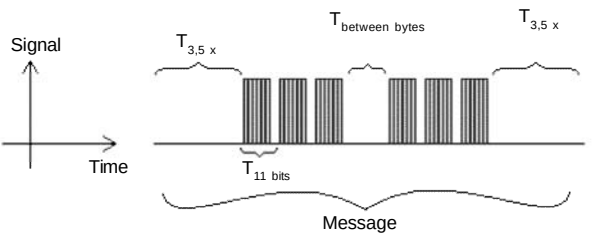

Figure 8.35 *- Times required during the communication of a message*

Communication	$T_{11\ bits}$	$T_{3,5x}$
9600 bits/s	1.146 ms	4.010 ms
19200 bits/s	573 µs	2.005 ms
38400 bits/s	285 µs	1.003 ms

Table 8.10 *- Times required during the communication of a message*

$T_{11\ bits}$ = Time to transmit one word of the message.
$T_{entre\ bytes}$ = Time between bytes (can not be longer than $T_{3,5x}$).
$T_{3,5x}$ = Minimum interval to indicate the begin and the end of the message (3,5 x T_{11bits}).

8.25.2 Operation of the CFW-08 in the Modbus-RTU Network

The CFW-08 frequency inverters operate as slaves of the Modbus-RTU network. The communication initiates with the master of the Modbus-RTU network requesting a service for a network address. When the inverter is configured to the corresponding address, it processes the question and answers to the master as requested.

8.25.2.1 RS-232 and RS-485 Interface Description

The CFW-08 frequency inverters use a serial interface for the communication with the Modbus-RTU network. There are two ways to perform the connection between the network master and the CFW-08:

RS-232:

- ☑ The interface is used for the point to point connection (between a single slave and the master).
- ☑ Maximum distance: 10 meters (32.8 ft).
- ☑ Signal levels according to EIA STANDARD RS-232C.
- ☑ Three wires: transmission (TX), reception (RX) and return (0 V).
- ☑ The RS-232 module (KCS-CFW08) must be used (refer to item 8.11).

RS-485:

- ☑ This interface is used for multipoint connection (several slaves and the master).
- ☑ Maximum distance: 1000 meters (use of shielded cables).
- ☑ Signal levels according to EIA STANDARD RS-485.
- ☑ Must be used with the module RS-485 (KRS-485-CFW08), refer to item 8.13.

Note: for connection, refer to item 8.24.7.

8.25.2.2 Inverter Configuration in the Modbus-RTU Network

To ensure a correct communication in the network, you must configure the inverter address in the network as well as the transfer rate and the existing parity type, besides the correct physical connection.

Inverter address in the network:

- ☑ The inverter address is defined through the parameter P308.
- ☑ If the serial communication type (P312) has been configured to Modbus- RTU, you may select the addresses from 1 to 247.
- ☑ Each slave shall have a different address.
- ☑ The master does not have address.
- ☑ The slave address must be known, even when connection is made point to point.

Transmission rate and parity:

- ☑ Both configurations are defined by parameter P312.
- ☑ Baud rates: 9600, 19200 or 38400 bits/s.
- ☑ Parity: none, odd parity or even parity.
- ☑ All slaves and even the network master must use the same baud rate and parity.

8.25.2.3 Access to the Inverter Data

All parameters and available basic variables for the CFW-08 can be accessed through the network:

- ☑ Parameters: are those set in the inverter and that can be displayed and changed through the HMI (Human-Machine Interface) (refer to item I - Parameters).
- ☑ Basic Variables: are the internal inverter variables that can be accessed only through serial interface. For instance, through these basic variables you can change the speed reference, read the inverter status, enable or disable the inverter, etc (refer to item 8.24.5.1 - Basic Variables).
- ☑ Register: nomenclature used to represent both parameters and basic variables during data transfer.
- ☑ Internal Bits: bits that are accessed only through the serial interface and that are used for inverter status controlling and monitoring.

Item 8.24.3.2 defines the resolution of the parameters and variables transmitted via serial interface.

Available functions and response times:

In the Modbus RTU protocol specification is defined the functions used for accessing different types of registers described in the specification. In the CFW-08 both parameters and basic variables are defined as being holding type registers (referenced as 4x). In addition to these registers, it is also possible to access the internal controlling and monitoring bits directly (referenced as 0x).

Following services (or functions) are available in the CFW-08 frequency inverter for accessing these registers and bits:

- ☑ Read Coils
  - Description: reading of internal register blocks or coils.
  - Function code: 01.
  - Broadcast: not supported
  - Response time: 10 to 20 ms.
- ☑ Read Holding Registers
  - Description: reading of register blocks of holding type.
  - Function code: 03.
  - Broadcast: not supported
  - Response time: 10 to 20 ms.
- ☑ Write Single Coil
  - Description: writing in a single internal bit or coil.
  - Function code: 05.
  - Broadcast: supported.
  - Response time: 10 to 20 ms.

☑ Write Single Register
Description: writing in a single register of holding type.
Function code: 06.
Broadcast: supported
Response time: 10 to 50 ms.

☑ Write Multiple Coils
Description: writing in internal bit blocks or coils.
Function code: 15.
Broadcast: supported
Response time: 10 to 20 ms.

☑ Write Multiple Registers
Description: writing in register blocks of holding type.
Function code: 16.
Broadcast: supported
Response time: 10 to 50 ms for each written register.

☑ Read Device Identification
Description: Identification of the inverter model.
Function code: 43.
Broadcast: not supported.
Response time: 10 to 20 ms.

Note: the Modbus RTU network slaves are addressed from 1 to 247. Master uses address 0 to send messages that are common to all slaves (broadcast).

Data addressing and offset:
The CFW-08 data addressing is realized with an offset equal to zero, that means that the address number is equal to the register number. The parameters are available from address 0 (zero) on, whilst the basic variables are available from address 5000 on. In same way, the status bits are made available from address 0 (zero) on and the control bits are made available from address 100 on.
Table below shows the addressing of bits, parameters and basic variables:

Parameters		
Parameter Number	Modbus Address	
	Decimal	Hexadecimal
P000	0	0000h
P001	1	0001h
⋮	⋮	⋮
P100	100	0064h
⋮	⋮	⋮

Table 8.11 *- Parameters addressing*

Basic Variables		
Number of the Basic Variable	Modbus Address	
	Decimal	Hexadecimal
V00	5000	1388h
V01	5001	1389h
⋮	⋮	⋮
V05	5005	138Dh

Table 8.12 *- Basic variables addressing*

Status Bits		
Bit Number	Modbus Address	
	Decimal	Hexadecimal
Bit 0	00	00h
Bit 1	01	01h
⋮	⋮	⋮
Bit 7	07	07h

Table 8.13 *- Status bits addressing*

Commands Bits		
Bit Number	Modbus Address	
	Decimal	Hexadecimal
Bit 100	100	64h
Bit 101	101	65h
⋮	⋮	⋮
Bit 107	107	6Bh

Table 8.14 *- Command bits addressing*

Note: all registers (parameters and basic variables) are considered as holding type registers, referenced from 40000 or 4x, whilst the bits are referenced from 0000 or 0x.
The status bits have the same functions of the bits 8 to 15 of the logic status (basic variable 2). These bits are available only for read, thus any attempt to write command returns error status to the master.

Status Bits	
Bit Number	Function
Bit 0	0 = Ramp enabling inactive 1 = Ramp enabling active
Bit 1	0 = General enabling inactive 1 = General enabling active
Bit 2	0 = Counter-clockwise direction of rotation 1 = Clockwise direction of rotation
Bit 3	0 = JOG inactive 1 = JOG active
Bit 4	0 = Local mode 1 = Remote mode
Bit 5	0 = No undervoltage 1 = With undervoltage
Bit 6	Not used
Bit 7	0 = No fault 1 = With fault

Table 8.15 *- Status bits signified*

The command bits are available to read and write and they have the same function of the logic command bits 0 to 7 (basic variable 3), however no requiring the use of the mask. The basic variable 3 write influences the status of these bits.

Command Bits	
Bit Number	Function
Bit 100	0 = Ramp disable (stops) 1 = Ramp enable (runs)
Bit 101	0 = General disable 1 = General enable
Bit 102	0 = Counter-clockwise direction of rotation 1 = Clockwise direction of rotation
Bit 103	0 = JOG disable 1 = JOG enable
Bit 104	0 = Goes to local mode 1 = Goes to remote mode
Bit 105	Not used
Bit 106	Not used
Bit 107	0 = It does not reset inverter 1 = It resets inverter

Table 8.16 *- Command bits signified*

8.25.3 Detailed Function Description

This section describes in details the functions that are available in the CFW-08 for the Modbus RTU communication. Please note the following during the message preparation:

- ☑ Values are always transmitted as hexadecimal values.
- ☑ The address of one data, the data number and the value of the registers are always represented through 16 bits. Thus these fields are transmitted by using two bytes (high and low). To access the bits, and the form to represent one bit depend on the used function.
- ☑ The messages, both for enquiry and response, cannot be longer than 128 bytes.
- ☑ The maximum number of read or written parameters in a single telegram cannot be bigger than 8.
- ☑ The resolution of each parameter or basic variable is as described in item 8.24.3.2.

8.25.3.1 Function 01 - Read Coils

It reads the content of an internal group of bits that must compulsorily in a numerical sequence. This function has the following structure for the read and response messages (the values are always hexadecimal, and each field represents one byte):

Query (Master)	Response (Slave)
Slave address	Slave address
Function	Function
Initial bit address (byte high)	Byte Count Field (number of data bytes)
Initial bit address (byte low)	Byte 1
Number of bits (byte high)	Byte 2
Number of bits (byte low)	Byte 3
CRC-	etc
CRC+	CRC-
	CRC+

Table 8.17 *- Function 01 structure*

Each response bit is placed at a position of the data bytes sent by the slave. The first byte, from the bits 0 to 7, receives the first 8 bits from the initial address indicated by the master. The other bytes (if the number of the read bits is higher than 8) remain in the same sequence. If the number of the read bits is not a multiple of 8, the remaining bits of the last byte should be filled out with 0 (zero).

☑ Example: reading of the status bits for general enable (bit 1) and direction of rotation (bit 2) of the CFW-08 at the address 1:

Query (Master)		Response (Slave)	
Field	Value	Field	Value
Slave address	01h	Slave address	01h
Function	01h	Function	01h
Initial bit address (byte high)	00h	Byte Count	01h
Initial bit address (byte low)	01h	Status of the bits 1 and 2	02h
Number of bits (byte high)	00h	CRC-	D0h
Number of bits (byte low)	02h	CRC+	49h
CRC-	ECh		
CRC+	0Bh		

Table 8.18 *- Message example using function 01*

As the number of read bits in the example is smaller than 8, the slave required only 1 byte for the response. The value of the byte was 02h, that as binary value will have the form 0000 0010. As the number of read bits is equal to 2, only the two less significant bits, that have the value 0 = general disable and 1 = direction of rotation are of interest. The other bits, as they did not be requested, are filled out with 0 (zero).

8.25.3.2 Function 03 - Read Holding Register

It reads the content of a group of registers that must be compulsorily in a numerical sequence. This function has following structure for the read and response messages (the values are always hexadecimal, and each field represents one byte):

Query (Master)	Response (Slave)
Slave address	Slave address
Function	Function
Initial register address (byte high)	Byte Count Field
Initial register address (byte low)	Data 1 (high)
Number of registers (byte high)	Data 1 (low)
Number of registers (byte low)	Data 2 (high)
CRC-	Data 2 (low)
CRC+	etc to
	CRC-
	CRC+

Table 8.19 *- Function 03 structure*

☑ Example: read of the value proportional to the frequency value (P002) and motor current (P003) of the CFW-08 at address 1:

Query (Master)		Response (Slave)	
Field	Value	Field	Value
Slave address	01h	Slave address	01h
Function	03h	Function	03h
Initial register (byte high)	00h	Byte Count	04h
Initial register (byte low)	02h	P002 (high)	09h
Number of registers (byte high)	00h	P002 (low)	C4h
Number of registers (byte low)	02h	P003 (high)	02h
CRC-	65h	P003 (low)	8Ah
CRC+	CBh	CRC-	38h
		CRC+	95h

Table 8.20 - *Message example using function 03*

Each register is always formed by two bytes (high and low). For the example, we have P002 = 09C4h, that in decimal number is equal to 2500.
As this parameter have a two decimal place indication, the real read value is 25.00 Hz. In the same way we will have a current value P003 = 028Ah, that is equal to a 650 decimal. As the current has two decimal resolution, the read value is 6.50 A.

8.25.3.3 Function 05 - Write Single Coil

This function is used to write a value to a single bit. The bit value is represented by using two bytes, where FF00h represents the bit that is equal to 1, and 0000h represents the bit that is equal to 0 (zero). It has the following structure (the values are always hexadecimal, and each field represents one byte):

Query (Master)	Response (Slave)
Slave address	Slave address
Function	Function
Bit address (byte high)	Bit address (byte high)
Bit address (byte low)	Bit address (byte low)
Bit value (byte high)	Bit value (byte high)
Bit value (byte low)	Bit value (byte low)
CRC-	CRC-
CRC+	CRC+

Table 8.21 *- Function 05 structure*

☑ Example: to drive a ramp enable command (bit 100 = 1) of a CFW-08 at the address 1:

Query (Master)		Response (Slave)	
Field	Value	Field	Value
Slave address	01h	Slave address	01h
Function	05h	Function	05h
Bit number (high)	00h	Bit number (high)	00h
Bit number (low)	64h	Bit number (low)	64h
Bit value (high)	FFh	Bit value (high)	FFh
Bit value (low)	00h	Bit value (low)	00h
CRC-	CDh	CRC-	CDh
CRC+	E5h	CRC+	E5h

Table 8.22 *- Message example using function 05*

For this function, the slave response is an identical copy of the query sent by the master.

8.25.3.4 Function 06 - Write Single Register

This function is used to write a value to a single register. This function has the following structure (values are always hexadecimal values, and each field represents one byte):

Query (Master)	Response (Slave)
Slave address	Slave address
Function	Function
Register address (byte high)	Register address (byte high)
Register address (byte low)	Register address (byte low)
Value for the register (byte high)	Value for the register (byte high)
Value for the register (byte low)	Value for the register (byte low)
CRC-	CRC-
CRC+	CRC+

Table 8.23 - *Function 06 structure*

☑ Example: write of the speed reference (basic variable 4) equal to 30.00 Hz of a CFW-08 at address 1.

Query (Master)		Response (Slave)	
Field	Value	Field	Value
Slave address	01h	Slave address	01h
Function	06h	Function	06h
Register (high)	13h	Register (high)	13h
Register (low)	8Ch	Register (low)	8Ch
Value (high)	0Bh	Value (high)	0Bh
Value (low)	B8h	Value (low)	B8h
CRC-	4Bh	CRC-	4Bh
CRC+	E7h	CRC+	E7h

Table 8.24 - *Message example using function 06*

For this function, the slave response will be again an identical copy to the request made by the master. As already informed above, the basic variables are addressed from 5000, thus the basic variable 4 will be addressed at 5004 (138Ch). The value for this variable is 30.00 Hz, that is represented by 3000 (0BB8h).

8.25.3.5 Function 15 - Write Multiple Coils

This function allows writing values for a bit group that must be in numerical sequence. This function can be also used to write a single bit (the values are always hexadecimal, and each field represents one byte).

Query (Master)	Response (Slave)
Slave address	Slave address
Function	Function
Initial bit address (byte high)	Initial bit address (byte high)
Initial bit address (byte low)	Initial bit address (byte low)
Number of bits (byte high)	Number of bits (byte high)
Number of bits (byte low)	Number of bits (byte low)
Byte Count Field (number of data bytes)	CRC-
Byte 1	CRC+
Byte 2	
Byte 3	
etc to	
CRC-	
CRC+	

Table 8.25 - *Function 15 structure*

The value of each bit that is being sent is placed at a position of the data bytes sent by the master. The first byte, in the bits 0 to 7, receives the 8 first bits by starting from the initial address indicated by the master. The other bytes (if the number of inscribed bits is higher than 8) remain in sequence. If the number of inscribed bits is not a multiple of 8, the remaining bits of the last byte should be filled in with 0 (zero).

☑ Example: command writing for general enabling (bit 100 = 1), general enabling (bit 101 = 1) and CWW-direction of rotation (bit 102 = 0), for a CFW-08 at address 1:

Query (Master)		Response (Slave)	
Field	Value	Field	Value
Slave address	01h	Slave address	01h
Function	0Fh	Function	0Fh
Initial bit (byte high)	00h	Initial bit (byte high)	00h
Initial bit (byte low)	64h	Initial bit (byte low)	64h
Number of bits (byte high)	00h	Number of bits (byte high)	00h
Number of bits (byte low)	03h	Number of bits (byte low)	03h
Byte Count	01h	CRC-	54h
Bits Value	03h	CRC+	15h
CRC-	BEh		
CRC+	9Eh		

Table 8.26 *- Message example using function 15*

As only three bits are written, the master needed only one byte to transmit the data. The transmitted values are in the three less significant bits of the byte that contains the value for the bits. The other bits of this byte remained with the value 0 (zero).

8.25.3.6 Function 16 - Write Multiple Registers

This function allows writing values to a register group that must be in numerical sequence. This function can also be used to write a single register (the values are always hexadecimal values and each field represents one byte).

Query (Master)	Response (Slave)
Slave address	Slave address
Function	Function
Initial register address (byte high)	Initial register address (byte high)
Initial register address (byte low)	Initial register address (byte low)
Number of registers (byte high)	Number of registers (byte high)
Number of registers (byte low)	Number of registers (byte low)
Byte Count Field (number of data bytes)	CRC-
Data 1 (high)	CRC+
Data 1 (low)	
Data 2 (high)	
Data 2 (low)	
etc to	
CRC-	
CRC+	

Table 8.27 - *Function 16 structure*

☑ Example: writing of the acceleration time (P100) = 1,0 s and deceleration time (P101) = 2.0 s, of a CFW-08 at the address 20:

Query (Master)		Response (Slave)	
Field	Value	Field	Value
Slave address	14h	Slave address	14h
Function	10h	Function	10h
Initial register (byte high)	00h	Initial register (byte high)	00h
Initial register (byte low)	64h	Initial register (byte low)	64h
Number of registers (byte high)	00h	Number of registers (byte high)	00h
Number of registers (byte low)	02h	Number of registers (byte low)	02h
Byte Count	04h	CRC-	02h
P100 (high)	00h	CRC+	D2h
P100 (low)	0Ah		
P101 (high)	00h		
P101 (low)	14h		
CRC-	91h		
CRC+	75h		

Table 8.28 - *Message example using function 16*

As the two parameters have a resolution of a decimal place for writing of 1.0 and 2.0 seconds, thus the values 10 (000Ah) and 20 (0014h) should be transmitted.

8.25.3.7 Function 43 - Read Device Identification

Auxiliary function that permits reading of the manufacturer, model and version of the product firmware. It has the following structure.

Query (Master)	Response (Slave)
Slave address	Slave address
Function	Function
MEI Type	MEI Type
Read Code	Conformity Level
Object Number	More Follows
CRC-	Next Object
CRC+	Number of Objects
	Object Code (*)
	Object Length (*)
	Object Value (*)
	CRC-
	CRC+

(*) The fields are repeated according to the number of objects.

Table 8.29 - *Function 43 structure*

This function permits reading of three information categories: Basic, Regular and Extended and each category are formed by a group of objects. Each object is formed by a sequence of ASCII characters For the CFW-08 are only available basic information formed by three objects:

- Object 00 - VendorName: always 'WEG'.
- Object 01 - ProductCode: formed by the product code (CFW-08), plus the rated inverter current.
- Object 02 - MajorMinorRevision: it indicates the inverter firmware version, in 'VX.XX' format.

The read code indicates which information categories are being read and if the objects are accessed individually or by sequence. In the example, the inverter supports 01 (basic information in sequence) and 04 (individual access to the objects) codes.

The other fields for the CFW-08 have fixed values.

☑ Example: read of basic information in sequence, starting from object 00, of a CFW-08 at address 1.

Query (Master)		Response (Slave)	
Field	Value	Field	Value
Slave address	01h	Slave address	01h
Function	2Bh	Function	2Bh
MEI Type	0Eh	MEI Type	0Eh
Read Code	01h	Read Code	01h
Object Number	00h	Conformity Level	51h
CRC-	70h	More Follows	00h
CRC+	77h	Next Object	00h
		Number of Objects	03h
		Object Code	00h
		Object Length	03h
		Object Value	'WEG'
		Object Code	01h
		Object Length	0Ch
		Object Value	'CFW-08 7.0A'
		Object Code	02h
		Object Length	05h
		Object Value	'V3.77'
		CRC-	C7h
		CRC+	DEh

Table 8.30 *- Message example using function 43*

In the example the object value has not been represented as hexadecimal value, but with corresponding ASCII characters. For instance, for the object 00, the 'WEG' value has been transmitted as being three ASCII characters, that as hexadecimal have the values 57h (W), 45h (E) and 47h (G).

8.25.4 Modbus-RTU Communication Errors

Errors can occur during the message transmission on network, or in the content of the received messages. Depending on the error type, inverter may answer or not to the master:

When the master sends a message to an inverter configured at determined network address, the inverter will not response if:

- ☑ Error in the parity bit.
- ☑ Error in the CRC.
- ☑ Time out between transmitted bytes (3.5 times the time required for the transmission of a 11-bit word).

In the case of a successful reception of the message, the inverter can detect problems and send an error message to the master indicating the problem that has been verified:

- ☑ Invalid function (error code = 1): the requested function has not been implemented for the inverter.
- ☑ Invalid data address (error code = 2): the data address (register or bit) does not exist.
- ☑ Data value invalid (error code = 3): this error occurs in the following conditions:
  - Value is out of permitted range.
  - Writing in data that cannot be changed (only read register, or register that does not allow changing with enabled inverter or bits of logic status).
  - Writing in function of the logic command that has not been enabled via serial interface.

8.25.4.1 Error Messages

When any error occurs in the message content (not during the data transfer), the slave must return a message indicating the error type that occurred. The errors that may occur in the CFW-08 during the message processing are errors relating to invalid function (code 01), invalid data address (code 02) and invalid data value (code 03).
The messages sent by the slave have following structure:

Response (Slave)
Slave address
Function code
(with most significant bit to 1)
Error code
CRC-
CRC+

Table 8.31 *- Error message structure*

☑ Master requests to the slave at address 1 to write in the parameter 50 (inexistent parameter):

Query (Master)		Response (Slave)	
Field	Value	Field	Value
Slave address	01h	Slave address	01h
Function	06h	Function	86h
Register (high)	00h	Error Code	02h
Register (low)	32h	CRC-	C3h
Value (high)	00h	CRC+	A1h
Value (low)	00h		
CRC-	28h		
CRC+	05h		

Table 8.32 *- Message error example*

TECHNICAL SPECIFICATIONS

This chapter describes the technical specifications (electrical and mechanical) of the CFW-08 inverter series.

9.1 POWER DATA

AC Input Specifications:

- ☑ Voltage: + 10 %, -15 % (with loss of motor efficiency)
- ☑ Frequency : 50/60 Hz (± 2 Hz)
- ☑ Phase unbalance: ≤ 3 %
- ☑ Overvoltage: Category III (EN 61010/UL 508C)
- ☑ Transient voltages according to Category III.

Minimum line impedance: variable according to inverter model.
Refer to item 8.21.
Power-up: maximum 10 ON/OFF cycles per hour (1 every 6 minutes).

9.1.1 200-240 V Power Supply

Model: Current (A) / Voltage (V)	1.6/ 200-240	2.6/ 200-240	4.0/ 200-240	1.6/ 200-240	2.6/ 200-240	4.0/ 200-240	7.0/ 200-240
Power (kVA) (1)	0.6	1.0	1.5	0.6	1.0	1.5	2.7
Rated output current (A) (2)	1.6	2.6	4.0	1.6	2.6	4.0	7.0
Max. output current (A) (3)	2.4	3.9	6.0	2.4	3.9	6.0	10.5
Power supply	Single-phase			Single-phase or three-phase			Three-phase
Rated input current (A)	3.5	5.7	8.8	2.0/3.5 (4)	3.1/5.7 (4)	4.8/8.8 (4)	8.1
Switching frequency (kHz)	5	5	5	5	5	5	5
Maximum motor power (5)	0.25 HP/ 0.18 kW	0.5 HP/ 0.37 kW	1 HP/ 0.75 kW	0.25 HP/ 0.18 kW	0.5 HP/ 0.37 kW	1 HP/ 0.75 kW	2 HP/ 1.5 kW
Dynamic braking	No	No	No	No	No	No	No
Internal Category C2 RFI filter (optional)	No	No	No	No	No	No	No
Footprint Category C2 RFI filter (optional)	Yes	Yes	Yes	Yes	Yes	Yes	No
External Category C1 RFI filter (optional)	Yes	Yes	Yes	Yes	Yes	Yes	No
Watt loss (W)	18	30	45	18	30	44	80
Dimensions in mm [in] (Height x Width x Depth)	151 x 75 x 131 [5.94 x 2.95 x 5.16]						

Table 9.1 a) *- Technical information about the inverter models 1.6-2.6-4.0-7.0 A/200-240 V*

Model: Current (A) / Voltage (V)	7.3/ 200-240	10/ 200-240	16/ 200-240	22/ 200-240	28/ 200-240	33/ 200-240
Power (kVA) (1)	2.8	3.8	6.1	8.4	10.7	12.6
Rated output current (A) (2)	7.3	10	16	22	28	33
Max. output current (A) (3)	11	15	24	33	42	49.5
Power supply	Single-phase or three-phase		Three- phase			
Rated input current (A)	8.6/16 (4)	12/22 (4)	19	24	33.6	40
Switching frequency (kHz)	5	5	5	5	5	5
Maximum motor power (5)	2 HP/ 1.5 kW	3 HP/ 2.2 kW	5 HP/ 3.7 kW	7.5 HP/ 5.5 kW	10 HP/ 7.5 kW	12.5 HP/ 9.2 kW
Dynamic braking	Yes	Yes	Yes	Yes	Yes	Yes
Internal Category C2 RFI filter (optional)	Yes (Single-phase)	Yes (Single-phase)	No	No	No	No
Footprint Category C2 RFI filter (optional)	No	No	No	No	No	No
External Category C1 RFI filter (optional)	Yes	Yes	Yes	Yes	Yes	Yes
Watt loss (W)	84	114	183	274	320	380
Dimensions in mm [in] (Height x Width x Depth)	200 x 115 x 150 [7.87 x 4.53 x 5.9]			203 x 143 x 165 [7.99 x 5.63 x 6.5]	290 x 182 x 196 [11.42 x 7.16 x 7.72]	

Table 9.1 b) *- Technical information about the inverter models 7.3-10-16-22-28-33 A/200-240 V*

9.1.2 380-480 V Power Supply

Model: Current (A) / Voltage (V)	1.0/ 380-480	1.6/ 380-480	2.6/ 380-480	4.0/ 380-480	2.7/ 380-480	4.3/ 380-480	6.5/ 380-480	10/ 380-480
Power (kVA) (1)	0.8	1.2	2.0	3.0	2.1	3.3	5.0	7.6
Rated output current (A) (2)	1.0	1.6	2.6	4.0	2.7	4.3	6.5	10
Maximum output current (A) (3)	1.5	2.4	3.9	6.0	4.1	6.5	9.8	15
Power supply	Three- phase							
Rated input current (A)	1.2	1.9	3.1	4.7	3.3	5.2	7.8	12
Switching frequency (kHz)	5	5	5	5	5	5	5	5
Maximum motor power (5)	0.25 HP / 0.18 kW	0.5 HP / 0.37 kW	1.5 HP / 1.1 kW	2 HP / 1.5 kW	1.5 HP / 1.1 kW	2 HP / 1.5 kW	3 HP / 2.2 kW	5 HP / 3.7 kW
Dynamic braking	No	No	No	No	Yes	Yes	Yes	Yes
Internal Category C2 RFI filter (optional)	No	No	No	No	Yes	Yes	Yes	Yes
Footprint Category C2 RFI filter (optional)	Yes	Yes	Yes	Yes	No	No	No	No
External Category C1 RFI filter (optional)	Yes	Yes	Yes	Yes	Yes	Yes	Yes	Yes
Watt loss (W)	17	25	43	66	45	71	109	168
Dimensions in mm [in] (Height x Width x Depth)	151 x 75 x 131 [5.94 x 2.95 x 5.16]				200 x 115 x 150 [7.87 x 4.53 x 5.9]			

Table 9.2 a) *- Technical information about the inverter models 1.0-1.6-2.6-2.7-4.0-4.3-6.5-10 A/380-480 V*

Model: Current (A) / Voltage (V)	13/ 380-480	16/ 380-480	24/ 380-480	30/ 380-480
Power (kVA) (1)	9.9	12.2	18.3	24
Rated output current (A) (2)	13	16	24	30
Maximum output current (A) (3)	19.5	24	36	45
Power supply	Three- phase			
Rated input current (A)	15	19	28.8	36
Switching frequency (kHz)	5	5	5	5
Maximum motor power (5)	7.5 HP / 5.6 kW	10 HP / 7.5 kW	15 HP/ 11 kW	20 HP/ 15 kW
Dynamic braking	Yes	Yes	Yes	Yes
Internal Category C2 RFI filter (optional)	Yes	Yes	Yes	Yes
External Category C1 RFI filter (optional)	Yes	Yes	Yes	Yes
Watt loss (W)	218	268	403	500
Dimensions in mm [in] (Height x Width x Depth)	203 x 143 x 165 [7.99 x 5.63 x 6.5]		290 x 182 x 196 [11.42 x 7.16 x 7.72]	

Table 9.2 b) *- Technical information about the inverter models 13-16-24-30 A/380-480 V*

NOTE!

(1) The power rating in kVA is determined by the following equation:

$$P(kVA) = \frac{\sqrt{3}\ .\ \text{Voltage (Volt)}\ .\ \text{Current (Amp)}}{1000}$$

The values shown in the table were calculated by considering the rated inverter current, input voltage of 220 V for the 200-240 V models and input voltage of 440 V for the 380-480 V models.

(2) Rated current is valid for the following conditions:

- ☑ Relative air humidity: 5 % to 90 %, non condensing.
- ☑ Altitude: 1000 m (3280.8 ft), up to 4000 m (13123.3 ft) with 10 % derating/1000 m (3280.8 ft) of the rated current.
- ☑ Ambient temperature: 0 ºC to 40 ºC (32 ºF to 104 ºF) (up to 50 ºC (122 ºF) with 2 %/ºC derating of the rated current).
- ☑ The rated current values are valid for the switching frequencies of 2.5 kHz or 5 kHz (factory setting). For higher switching frequencies, 10 kHz and 15 kHz, consider the values shown in the description of the parameter P297 (refer to chapter 6).

(3) Maximum output current:

Inverter supports an overload of 50 % (maximum output current = 1.5 x the rated output current) during 1 minute for each 10 minutes of operation. For higher switching frequencies, 10 kHz and 15 kHz, consider 1.5 times the values shown at the description of the parameter P297 (refer to chapter 6).

(4) Rated input current for single-phase operation.
Note: the models CFW080016B2024..., CFW080026B2024..., CFW080040B2024..., CFW080073B2024 ... and CFW080100B2024 ... can be operated both with single-phase voltage and three-phase voltage without output current derating.

(5) The indicated motor power ratings are only orientative values for IV-pole motors and normal duty loads. The precise inverter sizing must consider the actual motor nameplate and application data.

9.2 ELECTRONICS/GENERAL DATA

CONTROL	METHOD	☑ Voltage Source Inverter ☑ V/F Control or Sensorless Vector Control (V.V.C. - Voltage Vector Control) ☑ PWM SVM (Space Vector Modulation)
	OUTPUT FREQUENCY	☑ 0 to 300 Hz, resolution of 0.01 Hz
PERFORMANCE	V/F CONTROL	☑ Speed regulation: 1 % of the rated speed
	VECTOR CONTROL	☑ Speed regulation: 0.5 % of the rated speed
INPUTS (Control Board ECC3)	ANALOG	☑ CFW-08: 1 isolated input, resolution: 8 bits, linearity error <0,25 %. (0 to 10) V or (0 to 20) mA or (4 to 20) mA, Impedance: 100 kΩ (10 to 10) V, 500 Ω (0 to 20) mA or (4 to 20) mA, programmable function including digital input or PTC input ☑ CFW-08 Plus: 2 isolated inputs, resolution: 8 bits, linearity error <0,25 %. (0 to 10) V/(-10 to +10) V/(0 to 20) mA or (4 to 20) mA, Impedance: 100 kΩ (0 to 10) V/(-10 to +10) V, 500 Ω (0 to 20) mA/ (4 to 20) mA programmable function including digital input or PTC input
	DIGITAL	☑ 4 isolated digital inputs, NPN or PNP logic, programmable functions ☑ Resolution: 8 bits, programmable functions
OUPUTS (Control Board ECC3)	ANALOG	☑ CFW-08 Plus: 1 isolated output, (0 to +10) V, or (0 to 20) mA or (4 to 20) mA, $R_L \geq 10$ kΩ (maximum load)
	RELAY	☑ CFW-08: 1 relay with reverse contacts, 240 Vac, 0.5 A, programmable functions ☑ CFW-08 Plus: 2 relays, one with NO contact and one with NC contact. It can be programmed to operate as 1 reverse, 240 Vac, 0.5 A, programmable functions
SAFETY	PROTECTION	☑ Overcurrent/output short-circuit ☑ Output ground fault ☑ DC link under/overvoltage ☑ Inverter overtemperature ☑ Motor/inverter overload (IxT) ☑ External fault ☑ Programming error ☑ Self-tuning error ☑ Defective inverter
KEYPAD (HMI)	STANDARD (HMI-CFW-08-P)	☑ 8 keys: start, stop, increment, decrement, FWD/REV, JOG, local/remote and programming ☑ LEDs display: 4 digits with 7 segments ☑ LEDs for FWD/REV and LOCAL/REMOTE indication ☑ It permits access/alteration of all parameters ☑ Display accuracy: - current: 10 % of the rated current - speed resolution: 1 rpm - frequency resolution: 0.01 Hz
DEGREE OF PROTECTION	NEMA1 / IP20	☑ Models 22 A, 28 A and 33 A/220-240 V and 13 A, 16 A, 24 A and 30 A/380 V-480 V; other models with KN1-CFW08-M1 and KN1-CFW08-M2 kits
	PROTECTED CHASSIS/ IP20	☑ All models without KN1-CFW08-M1 and KN1-CFW08-M2 kits
STANDARDS	IEC 146	☑ *Inverters and semicondutors*
	UL 508 C	☑ *Power Conversion Equipment*
	EN 50178	☑ *Electronic equipment for use in power installations*
	EN 61010	☑ *Safety requirements for electrical equipment for measurement, control and laboratory use*
	EN 61800-3	☑ *EMC product standard for adjustable speed electrical power drive systems*

Table 9.3 *- General data of the CFW-08 electronics*

9.3 WEG STANDARD IV-POLE MOTOR DATA

The inverters are delivered with factory setting to drive WEG three-phase, IV-pole, IP55 motors, voltage of 220 V for 200-240 V models or 380 V for 380-480 V models and with power as indicated in the tables of items 9.1.1 and 9.1.2.
The data of the applied motor must be programmed at P399 to P409 and the value of P409 (stator resistance) obtained through the Self-Tuning (parameter estimation via P408).
The table below shows the data of WEG standard motors as a reference.

Power [P404] (HP)	Power [P404] (kW)	Frame	Voltage [P400] (V)	Current [P401] (A)	Freq. [P403] (Hz)	Speed [P402] (rpm)	Efficiency at 100 % of the rated power η [P399] (%)	Power factor at 100 % of the rated power cosφ [P407]	Stator resistance (*) [P409] (Ω)
0.16	0.12	63	220	0.85	60	1720	56.0	0.66	21.77
0.25	0.18	63		1.12		1720	64.0	0.66	14.87
0.33	0.25	63		1.42		1720	67.0	0.69	10.63
0.5	0.37	71		2.07		1720	68.0	0.69	7.37
0.75	0.55	71		2.90		1720	71.0	0.70	3.97
1.0	0.75	80		3.08		1730	78.0	0.82	4.13
1.5	1.10	80		4.78		1700	72.7	0.83	2.78
2.0	1.50	90S		6.47		1720	80.0	0.76	1.55
3.0	2.20	90L		8.57		1710	79.3	0.85	0.99
4.0	3.00	100L		11.6		1730	82.7	0.82	0.65
5.0	3.70	100L		13.8		1730	84.6	0.83	0.49
6.0	4.50	112M		16.3		1730	84.2	0.86	0.38
7.5	5.50	112M		20.0		1740	88.5	0.82	0.27
10	7.50	132S		26.6		1760	89.0	0.84	0.23
12.5	9.20	132M		33.00		1755	87.7	0.86	0.16
0.16	0.12	63	380	0.49	60	1720	56.0	0.66	65.30
0.25	0.18	63		0.65		1720	64.0	0.66	44.60
0.33	0.25	63		0.82		1720	67.0	0.69	31.90
0.5	0.37	71		1.20		1720	68.0	0.69	22.10
0.75	0.55	71		1.67		1720	71.0	0.70	11.90
1.0	0.75	80		1.78		1730	78.0	0.82	12.40
1.5	1.10	80		2.76		1700	72.7	0.83	8.35
2.0	1.50	90S		3.74		1720	80.0	0.76	4.65
3.0	2.20	90L		4.95		1710	79.3	0.85	2.97
4.0	3.00	100L		6.70		1730	82.7	0.82	1.96
5.0	3.70	100L		7.97		1730	84.6	0.83	1.47
6.0	4.50	112M		9.41		1730	84.2	0.86	1.15
7.5	5.50	112M		11.49		1740	88.5	0.82	0.82
10	7.50	132S		15.18		1760	89.0	0.84	0.68
12.5	9.20	132M		18.48		1755	87.7	0.86	0.47
15	11	132M		22.7		1755	88.5	0.83	0.43
20	15	160M		30.0		1760	90.2	0.83	0.23

Table 9.4 - *Characteristics of WEG standard IV-pole motors*

Power [P404] (HP)	Power [P404] (kW)	Frame	Voltage [P400] (V)	Current [P401] (A)	Freq. [P403] (Hz)	Speed [P402] (rpm)	Efficiency at 100 % of the rated power η [P399] (%)	Power factor at 100 % of the rated power cosφ [P407]	Stator resistance (*) [P409] (Ω)
0.16	0.12	63	230	0.73	50	1375	57	0.72	30.62
0.25	0.18	63		1.05		1360	58	0.74	20.31
0.33	0.25	71		1.4		1310	59	0.76	14.32
0.5	0.37	71		1.97		1320	62	0.76	7.27
0.75	0.55	80		2.48		1410	68	0.82	5.78
1	0.75	80		3.23		1395	72	0.81	4.28
1.5	1.1	90S		4.54		1420	77	0.79	2.58
2	1.5	90L		5.81		1410	79	0.82	1.69
3	2.2	100L		8.26		1410	81.5	0.82	0.98
4	3	100L		11.3		1400	82.6	0.81	0.58
5.5	4	112M		14.2		1440	85	0.83	0.43
7.5	5.5	132S		19.1		1450	86	0.84	0.25
10	7.5	132M		25.7		1455	87	0.84	0.20
0.16	0.12	63	400	0.42	50	1375	57	0.72	91.85
0.25	0.18	63		0.6		1360	58	0.74	60.94
0.33	0.25	71		0.8		1310	59	0.76	42.96
0.5	0.37	71		1.13		1320	62	0.76	21.81
0.75	0.55	80		1.42		1410	68	0.82	17.33
1	0.75	80		1.86		1395	72	0.81	12.85
1.5	1.1	90S		2.61		1420	77	0.79	7.73
2	1.5	90L		3.34		1410	79	0.82	5.06
3	2.2	100L		4.75		1410	81.5	0.82	2.95
4	3	100L		6.47		1400	82.6	0.81	1.75
5.5	4	112M		8.18		1440	85	0.83	1.29
7.5	5.5	132S		11		1450	86	0.84	0.76
10	7.5	132M		14.8		1455	87	0.84	0.61
15	11	160M		22.1		1455	88.5	0.81	0.35
20	15	160L		29.1		1460	89.7	0.83	0.24

Table 9.4 (cont.) - *Characteristics of WEG standard IV-pole motors*

(*) - The inverter considers the value of the stator resistance as the motor has been always star-connected, independently of its connection in the terminal box.

- The value of the stator resistance is a mean value per phase considering the motors with temperature rise (ΔT) of 100 ºC (212 ºF).