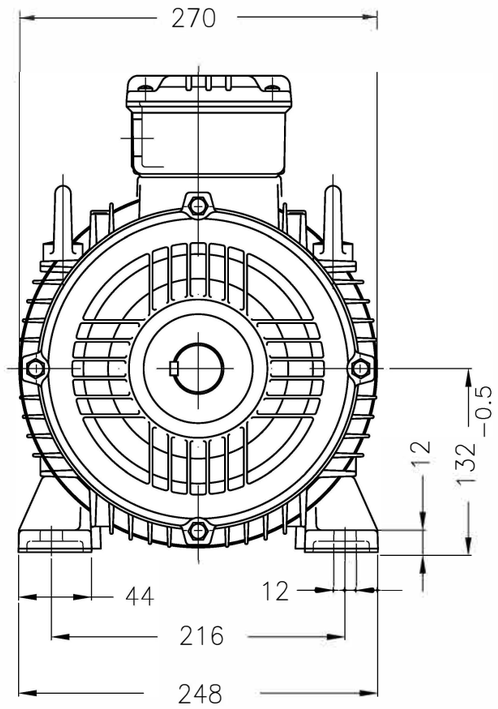

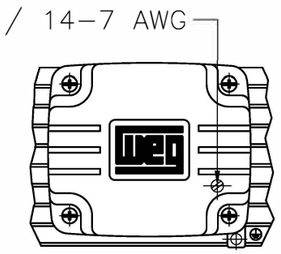

View X

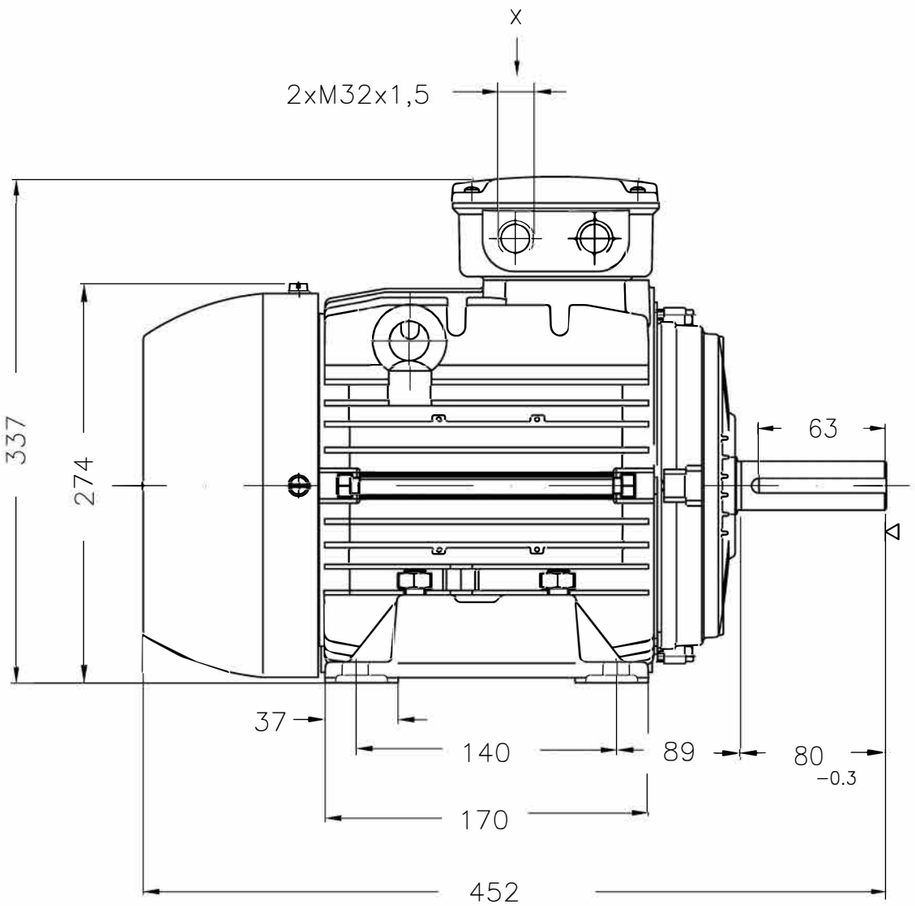

DE Shaft End

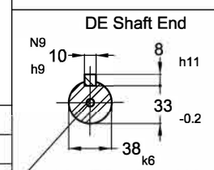

DM1 2 WEG WPR-7339 (DS DIN332)

Color RAL 5009

Painting plan 207A

Mounting B3T

5.5 kW 02 Poles 50 Hz | A

ECM	LOC	SUMMARY OF MODIFICATIONS	EXECUTED	CHECKED	RELEASED	DATE	VER
			PIRWBUSER				00

EXECU TED	PIRWBU SER	THREE PH. MOTOR MULTIMOUNTIN TOP PREM. EFF.	PREVIEW
CHECKED		FRAME S132S IP55 TEFC	WDD 00
RELEASED			
REL. DA TE		W M O Ja ragu a dc S ul P ro du Engineering	SHEET 1 / 1

Dimensions in mm

XME A3

WEG's property. Forbidden reproduction without previous authorization.